

Getting Started with HFSS: A Waveguide T Junction

ANSYS, Inc.
Southpointe
2600 ANSYS Drive
Canonsburg, PA 15317
ansysinfo@ansys.com
http://www.ansys.com
(T) 724-746-3304
(F) 724-514-9494

Release 18.1
April 2017

ANSYS, Inc. and ANSYS Europe, Ltd. are UL registered ISO 9001:2008 companies.

Copyright and Trademark Information

© 2017 ANSYS, Inc. Unauthorized use, distribution or duplication is prohibited.

ANSYS, ANSYS Workbench, Ansoft, AUTODYN, EKM, Engineering Knowledge Manager, CFX, FLUENT, HFSS and any and all ANSYS, Inc. brand, product, service and feature names, logos and slogans are registered trademarks or trademarks of ANSYS, Inc. or its subsidiaries in the United States or other countries. ICEM CFD is a trademark used by ANSYS, Inc. under license. CFX is a trademark of Sony Corporation in Japan. All other brand, product, service and feature names or trademarks are the property of their respective owners.

Disclaimer Notice

THIS ANSYS SOFTWARE PRODUCT AND PROGRAM DOCUMENTATION INCLUDE TRADE SECRETS AND ARE CONFIDENTIAL AND PROPRIETARY PRODUCTS OF ANSYS, INC., ITS SUBSIDIARIES, OR LICENSORS. The software products and documentation are furnished by ANSYS, Inc., its subsidiaries, or affiliates under a software license agreement that contains provisions concerning non-disclosure, copying, length and nature of use, compliance with exporting laws, warranties, disclaimers, limitations of liability, and remedies, and other provisions. The software products and documentation may be used, disclosed, transferred, or copied only in accordance with the terms and conditions of that software license agreement.

ANSYS, Inc. is certified to ISO 9001:2008.

U.S. Government Rights

For U.S. Government users, except as specifically granted by the ANSYS, Inc. software license agreement, the use, duplication, or disclosure by the United States Government is subject to restrictions stated in the ANSYS, Inc. software license agreement and FAR 12.212 (for non-DOD licenses).

Third-Party Software

See the legal information in the product help files for the complete Legal Notice for ANSYS proprietary software and third-party software. If you are unable to access the Legal Notice, please contact ANSYS, Inc.

ANSYS Electromagnetics Suite 18.1 - © ANSYS, Inc. All rights reserved. - Contains proprietary and confidential information of ANSYS, Inc. and its subsidiaries and affiliates.

Conventions Used in this Guide

Please take a moment to review how instructions and other useful information are presented in this guide.

- Procedures are presented as numbered lists. A single bullet indicates that the procedure has only one step.
- Bold type is used for the following:
  - Keyboard entries that should be typed in their entirety exactly as shown. For example, "**copy file1**" means the word copy must be **typed**, then a space must be typed, and then **file1** must be typed.
  - On-screen prompts and messages, names of options and text boxes, and menu commands. Menu commands are often separated by carats. For example, "click **HFSS>Excitations>Assign>Wave Port**."
  - Labeled keys on the computer keyboard. For example, "Press **Enter**" means to press the key labeled **Enter**.
- Italic type is used for the following:
  - Emphasis.
  - The titles of publications.
  - Keyboard entries when a name or a variable must be typed in place of the words in italics. For example, "**copy** *file name*" the word **copy must be typed, then** a space must be typed, and then name of the file must be typed.
- The plus sign (+) is used between keyboard keys to indicate that you should press the keys at the same time. For example, "Press Shift+F1" means to press the Shift key and the F1 key at the same time.
- Toolbar buttons serve as shortcuts for executing commands. Toolbar buttons are displayed after the command they execute. For example,



- "On the Draw menu, click Line " means that you can click the Draw Line toolbar button to execute the Line command.

Getting Help: ANSYS Technical Support

For information about ANSYS Technical Support, go to the ANSYS corporate Support website, http://www.ansys.com/Support. You can also contact your ANSYS account manager in order to obtain this information.

All ANSYS software files are ASCII text and can be sent conveniently by e-mail. When reporting difficulties, it is extremely helpful to include very specific information about what steps were taken or what stages the simulation reached, including software files as applicable. This allows more rapid and effective debugging.

Help Menu

To access online help from the menu bar, click **Help** and select from the menu:

- **HFSS Contents** - click here to open the contents of the online help.

ANSYS Electromagnetics Suite 18.1 - © ANSYS, Inc. All rights reserved. - Contains proprietary and confidential information of ANSYS, Inc. and its subsidiaries and affiliates.

- **HFSS Search** - click here to open the search function of the online help.

Context-Sensitive Help

To access online help from the user interface, do one of the following:

- To open a help topic about a specific menu command, press **Shift+F1**, and then click the command or toolbar icon.
- To open a help topic about a specific dialog box, open the dialog box, and then press **F1**.

ANSYS Electromagnetics Suite 18.1 - © ANSYS, Inc. All rights reserved. - Contains proprietary and confidential information of ANSYS, Inc. and its subsidiaries and affiliates.

Table of Contents

Table of Contents **Contents-1**

1 - Introduction **1-1**

Overview of the HFSS GUI 1-1

Distinct Features of HFSS 1-3

The Optimetrics Feature 1-3

Sample Project - The Tee Junction 1-4

Analysis of the Tee 1-4

What's Next? 1-5

2 - Set Up the T-Project **2-1**

Launch HFSS and Set Up the Tee Project 2-1

Set the Units of Measurement 2-3

Driven Modal 2-4

Driven Terminal 2-4

Eigenmode 2-4

Transient 2-4

Set Solution Type for Tee 2-4

What's Next? 2-5

3 - Create the Tee Model **3-1**

How To Draw the T-Junction 3-1

Draw a 3D Box 3-1

Alternative Method 3-6

Assign a Wave Port to the Box 3-8

Duplicate the Box 3-11

Duplicate Boundaries/mesh operations 3-11

Create the Second Section 3-12

Create the Third Section 3-14

Unite the Three Sections 3-14

Create the Septum 3-16

ANSYS Electromagnetics Suite 18.1 - © ANSYS, Inc. All rights reserved. - Contains proprietary and confidential information of ANSYS, Inc. and its subsidiaries and affiliates.

Draw a Box 3-16
Modify the Dimensions of the Septum 3-18
Assign a Name to the Box 3-18
Subtract Septum from the T-Junction 3-18
What's Next? 3-20
4 - Solve the Design 4-1
Add a Frequency Sweep to the Setup 4-2
Validate the Design 4-4
Analyze the Design 4-4
Modify the Septum's Position 4-5
Re-analyze the Tee 4-6
What's Next? 4-6
5 - Compare the Solutions 5-1
Curve Information 5-3
Add Data Markers 5-4
Create a Field Overlay Plot 5-5
Modify Septum Position 5-5
Create the E Field 5-6
Animate the E-Field 5-8
Modify Septum's Position and Re-animate 5-10
Exit HFSS 5-11

ANSYS Electromagnetics Suite 18.1 - © ANSYS, Inc. All rights reserved. - Contains proprietary and confidential information of ANSYS, Inc. and its subsidiaries and affiliates.

1 - Introduction

This *document* is intended as supplementary material to HFSS for beginners and advanced users. It includes instructions to create, solve, and analyze a T-junction.

This chapter contains the following topics:

- What You Will Learn.
- Overview of the HFSS GUI.
- Distinct Features of HFSS.
- The Optimetrics Feature.
- Sample Project: The Tee Junction.
- Analysis of the Tee.
- What's Next?

What You Will Learn

You will learn to perform the following tasks in HFSS:

- Set up the Tee project.
- Create the Tee model.
- Modify a model's design parameters.
- Assign variables to a model's design parameters.
- Specify solution settings for a design.
- Validate a design setup.
- Run an HFSS simulation.
- Create a 2D x-y plot of S-parameter and Frequency.
- Create a field overlay plot of results.
- Create a phase animation of results.

Overview of the HFSS GUI

A typical HFSS GUI is shown in "An HFSS Graphical User Interface" on the next page. .

The GUI has a number of components described as follows:

Project Manager

Lists all of the HFSS projects, each composed of many features like Model, Boundaries, Excitations, Analysis, Definitions, Materials etc.

Message Manager

Displays error, warning, and informational messages for an active project.

Progress Window

ANSYS Electromagnetics Suite 18.1 - © ANSYS, Inc. All rights reserved. - Contains proprietary and confidential information of ANSYS, Inc. and its subsidiaries and affiliates.

Displays progress of a simulation/analysis of a design.

3D Modeler Window

Indicates the area to draw designs with the history tree.

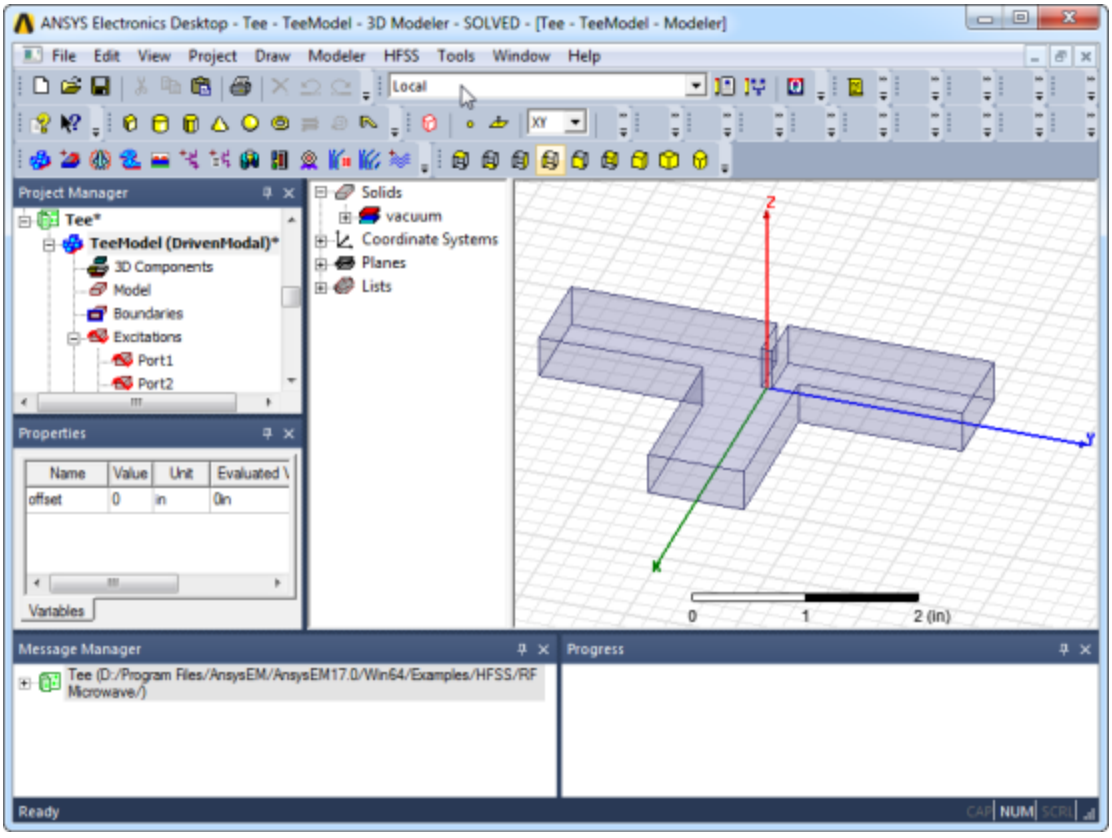

Figure 1-1 An HFSS Graphical User Interface

History Tree

Lists all operations/commands implemented on a design.

Menu Bar

Lists a set of options/items from which to choose; namely File, Edit, View, Project, Draw, Modeler, HFSS, Tools etc.

Toolbars

Lists a number of options as shortcuts below the Menu Bar.

Status Bar

ANSYS Electromagnetics Suite 18.1 - © ANSYS, Inc. All rights reserved. - Contains proprietary and confidential information of ANSYS, Inc. and its subsidiaries and affiliates.

Occurs at the bottom of the GUI and displays current statuses and instructions that help you perform operations while drawing a design, setting its co-ordinates and dimensions, assigning attributes etc.

Distinct Features of HFSS

HFSS offers some special features to help you create and work with your design and bring it into a desirable and effective condition. The features are as follows:

Numerous ways to perform similar tasks:

For example, you can select and assign design parameter values in many ways.

Create design at your discretion:

You do not need to follow any sequence of events to create your design. This guide shows a convenient method to create the T-junction; however, you can execute the steps of the design in any logical order.

Quickly modify design properties:

For example, you can draw a box freehand, then specify its exact dimensions in the **Properties** window and modify them at any time.

Track modifications easily:

The History and Project trees help you keep track of your design modifications. The branches provide access to setup dialogs, where you can modify design properties.

Modify the model view:

Shortcut keys like **Ctrl+D** are available to fit the model in the view window.

Parameterize design properties and save time:

For example, You can assign a design variable to the septum's position. This enables you to quickly modify it and generate new results.
For more information, see "The Optimetrics Feature."

***Analyze results* by post processing:**

For example, the animations you create will help you visualize the difference in field pattern results for the two septum positions.

The Optimetrics Feature

Parameterizing is effective when HFSS employs the Optimetrics feature, which lets you define and solve a series of variable values within a range specified through parametric analysis. To avail this feature, see "OptimTee Project."

ANSYS Electromagnetics Suite 18.1 - © ANSYS, Inc. All rights reserved. - Contains proprietary and confidential information of ANSYS, Inc. and its subsidiaries and affiliates.

Sample Project - The Tee Junction

In this project you will design a T-junction with an inductive septum and analyze its behavior. This structure splits an incoming microwave signal into two outgoing signals. The septum divides the signal and directs it to the output ports, and minimizes reflection at its input port.

A high frequency (10 GHz) enters the waveguide at Port 1 (see below) and exits at Ports 2 and 3. The position of the septum determines the transmission and reflection of the signal.

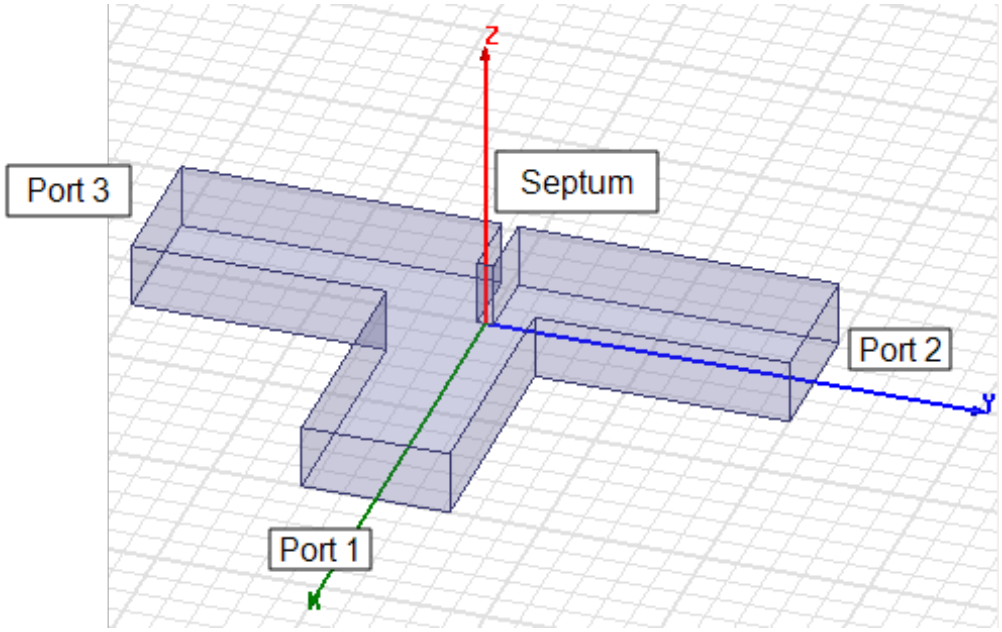

Figure 1-2 The Tee Model

Analysis of the Tee

On the basis of prior simulations and product reviews (see [1] at the end of this topic) the following results were observed:

1. If the septum is located centrally opposite to Port 1, it divides the signal and directs it equally to the output ports, 2 and 3.
2. If the septum is moved 0.2 inches closer to Port 2, it reduces the transmission through Port 2 to about 0.1 and increases transmission through Port 3 to about 0.9.
3. The magnitudes of S21 and S31 approximately equal 0.7 with low incidental reflection (S11) at Port 1.

You will create a 2D x-y plot of Frequency vs S-parameters for each septum position and verify that your results tally with the observed results. You can also compare the E-field pattern at each septum position by creating phase-animated field plots on the model geometry. These comparisons should indicate whether the field pattern changes as expected with the septum's position.

ANSYS Electromagnetics Suite 18.1 - © ANSYS, Inc. All rights reserved. - Contains proprietary and confidential information of ANSYS, Inc. and its subsidiaries and affiliates.

[1] “Parametrics and Optimization Using Ansoft HFSS,” *Microwave Journal*, Product Reviews, November 1999.

What’s Next?

Now that you have gained familiarity with the HFSS GUI, and the Tee Model and have a sense of the expected results of the simulations, you can proceed to the next chapter and learn the process of setting up the Tee project.

ANSYS Electromagnetics Suite 18.1 - © ANSYS, Inc. All rights reserved. - Contains proprietary and confidential information of ANSYS, Inc. and its subsidiaries and affiliates.

ANSYS Electromagnetics Suite 18.1 - © ANSYS, Inc. All rights reserved. - Contains proprietary and confidential information of ANSYS, Inc. and its subsidiaries and affiliates.

2 - Set Up the T-Project

This chapter contains the following topics:

- What is an HFSS Project?
- Launch HFSS and Set up the Tee Project.
- Set the Units of Measurements.
- The Solution Types.
- Select Solution Type for Tee.

What is an HFSS Project?

An HFSS project is a collection of one or more designs you can save in a single *.hfss file. When you launch HFSS, it automatically creates a new project. You can save this default project by a new name.

Launch HFSS and Set Up the Tee Project

You must launch ANSYS Electronics Desktop and set up the Tee project to design a T-junction. We recommend you store a shortcut of the HFSS application on your desktop.

1. Double-click the **ANSYS Electronics Desktop**icon on your desktop.

   ANSYS Electronics Desktop opens with a new project listed on its Project Manager window. See " Project Manager Window" below. .

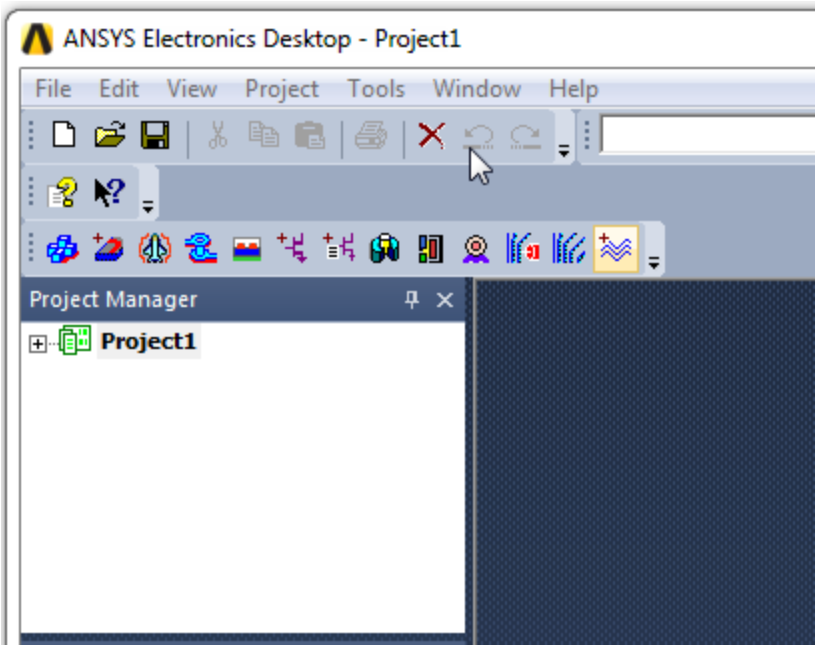

Figure 2-1 Project Manager Window

ANSYS Electromagnetics Suite 18.1 - © ANSYS, Inc. All rights reserved. - Contains proprietary and confidential information of ANSYS, Inc. and its subsidiaries and affiliates.

Note If a project is not listed in the project tree, go to File and click New to include one; and if the Project Manager window does not appear after launching the application, go to View and enable it.

2. Do one of the following:
   a. Click the HFSS icon on the toolbar.

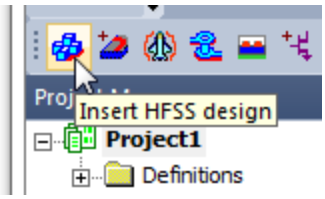

   b. Click **Project>Insert HFSS Design**.

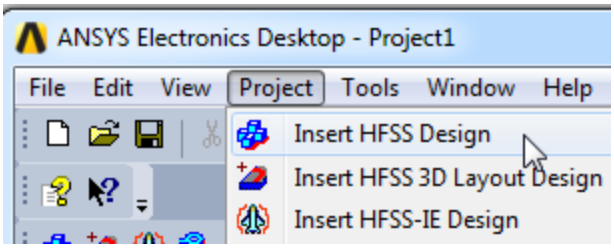

HFSSDesign*n* appears in the Project tree. See " HFSS Designn included" on the facing page. .

ANSYS Electromagnetics Suite 18.1 - © ANSYS, Inc. All rights reserved. - Contains proprietary and confidential information of ANSYS, Inc. and its subsidiaries and affiliates.

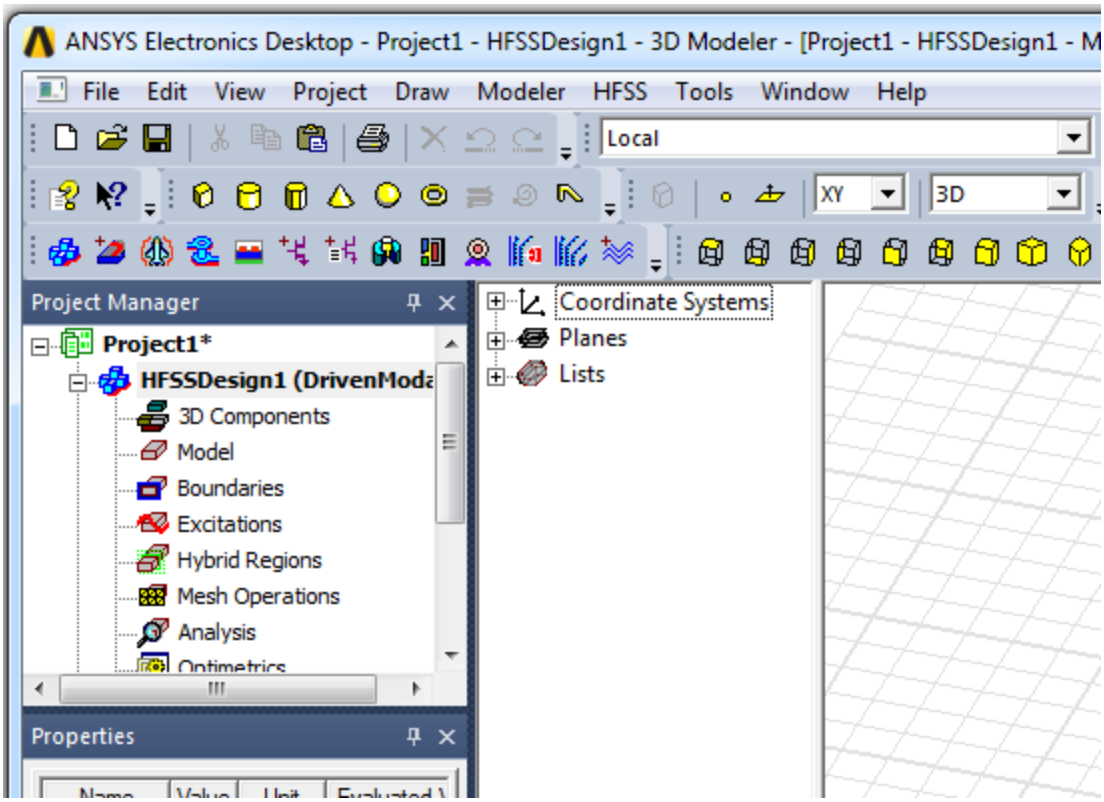

Figure 2-2 HFSS Design*n* included

Note A new project is listed in the project tree in the Project Manager window with the default label Project*n*. Definitions and Materials are stored under the project name.

3. Right click **HFSSDesign*n***, click Rename on the shortcut menu, type TeeModel and press Enter.

   The design is renamed as TeeModel.

4. Click **File>Save As**.
   The **Save As** dialog appears.
5. Browse for a location to store the file (such as C:\ANSYS Electronics Desktop\Projects) and then, double-click the folder's name.
6. Type ***Tee*** in the **File name** text box, and then, click **Save**.

   The project is saved in the folder you selected to the file name *Tee.aedt*.

Set the Units of Measurement

Set the units of measurement for drawing the geometric model (Tee) as follows:

1. On the HFSS toolbar, click **Modeler>Units**.

   The **Set Model Units** dialog appears.

ANSYS Electromagnetics Suite 18.1 - © ANSYS, Inc. All rights reserved. - Contains proprietary and confidential information of ANSYS, Inc. and its subsidiaries and affiliates.

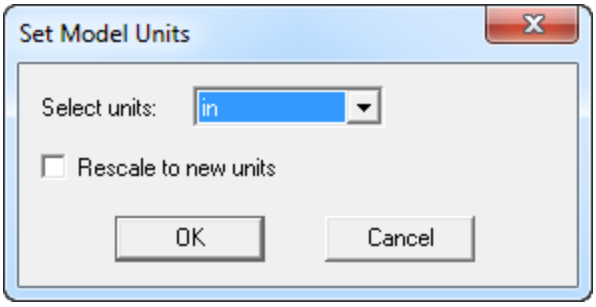

Figure 2-3 Set Model Units dialog

2. Select **in** (inches) from the **Select units** drop-down menu, and click **OK**.

Solution Types

You must specify the type of solution you want HFSS to calculate. The solution types as follows:

Driven Modal

Use this type of solution for passive high frequency structures such as microstrips, waveguides, and transmission lines.

Driven Terminal

Use this type for simulations that deal with signal integrity for models that have multi-conductor transmission lines.

Eigenmode

Use this type to calculate resonances of a given structure (e.g. filters).

Transient

Use this type to employ time-domain solutions for simulations with pulsed excitations such as ultra-wide band antennas.

Set Solution Type for Tee

The settings that HFSS offers on the user interface depends on the chosen solution type. For the Coax Tee, select Driven Modal as the solution type.

1. On the toolbar click **HFSS>Solution Type**.
   The **Solution Type** dialog appears.
2. In the **Solution Type** dialog box, select **Driven Modal**, and then click **OK**.

ANSYS Electromagnetics Suite 18.1 - © ANSYS, Inc. All rights reserved. - Contains proprietary and confidential information of ANSYS, Inc. and its subsidiaries and affiliates.

This ensures that HFSS will calculate the modal-based S-parameters using Driven Modal. The S-matrix solutions will be expressed in terms of the incident and reflected powers of waveguide modes.

Note Convergence for Driven Modal is Delta S for modal SParameters.

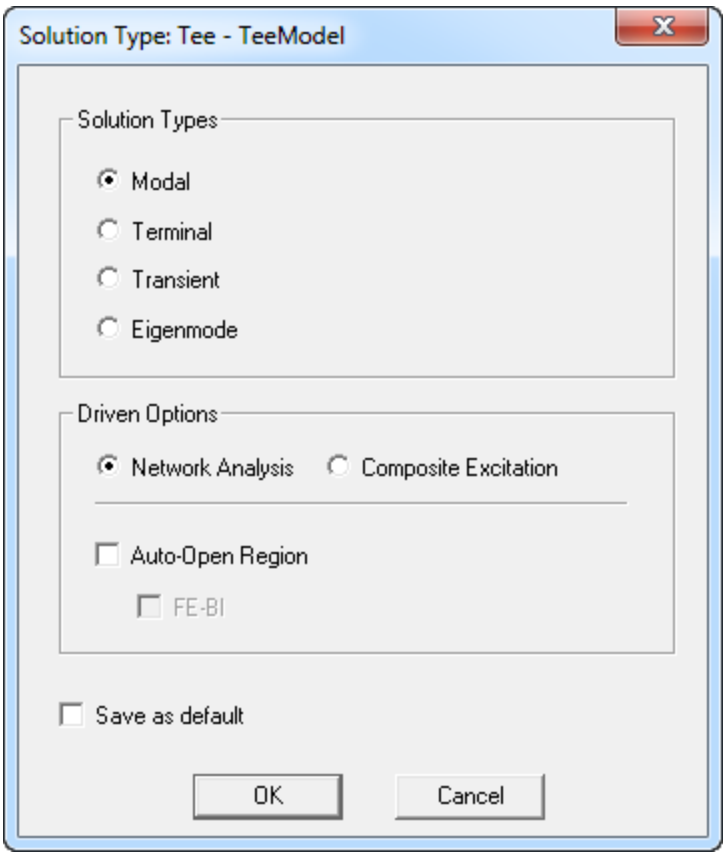

Figure 2-4 Solution Type

What's Next?

In this chapter you set up the project and the tools necessary for you to begin drawing the Tee structure. In the next chapter you will learn how to draw the Tee and assign co-ordinates, dimensions, boundary conditions etc to proceed with building the entire Tee structure.

ANSYS Electromagnetics Suite 18.1 - © ANSYS, Inc. All rights reserved. - Contains proprietary and confidential information of ANSYS, Inc. and its subsidiaries and affiliates.

ANSYS Electromagnetics Suite 18.1 - © ANSYS, Inc. All rights reserved. - Contains proprietary and confidential information of ANSYS, Inc. and its subsidiaries and affiliates.

3 - Create the Tee Model

This chapter contains the following topics:

- How To Draw the T-Junction.
- Draw a Box.
- Alternative Method.
- Assign a Wave Port to the Box.
- Duplicate the Box.
- Duplicate Boundaries and Mesh Operations.
- Create the Second Section.
- Create the Third Section.
- Unite the Three Sections.
- Draw the septum.
- Assign a variable to the septum's position.
- Subtract the septum from the T-junction.

How To Draw the T-Junction

The T-junction is made up of three joined box objects that you can create as follows:

- Draw a box to represent a section of the tee.
- Assign a wave port to one of its faces.
- Duplicate the box twice to create the second and third sections of the tee.
- Unite the three sections to form the Tee.

Ensuing sections describe the above items.

Draw a 3D Box

You can draw a 3D box object to represent the first section of the Tee as follows:

1. Go to **Tools**, **Options**, **General Options** and click **3D Modeler**.
2. On the **Drawing** panel, verify that the last option **Edit properties of new primitives** is selected, and click **OK**, if necessary.

   Note You can edit the properties of your design only if this option is checked.

ANSYS Electromagnetics Suite 18.1 - © ANSYS, Inc. All rights reserved. - Contains proprietary and confidential information of ANSYS, Inc. and its subsidiaries and affiliates.

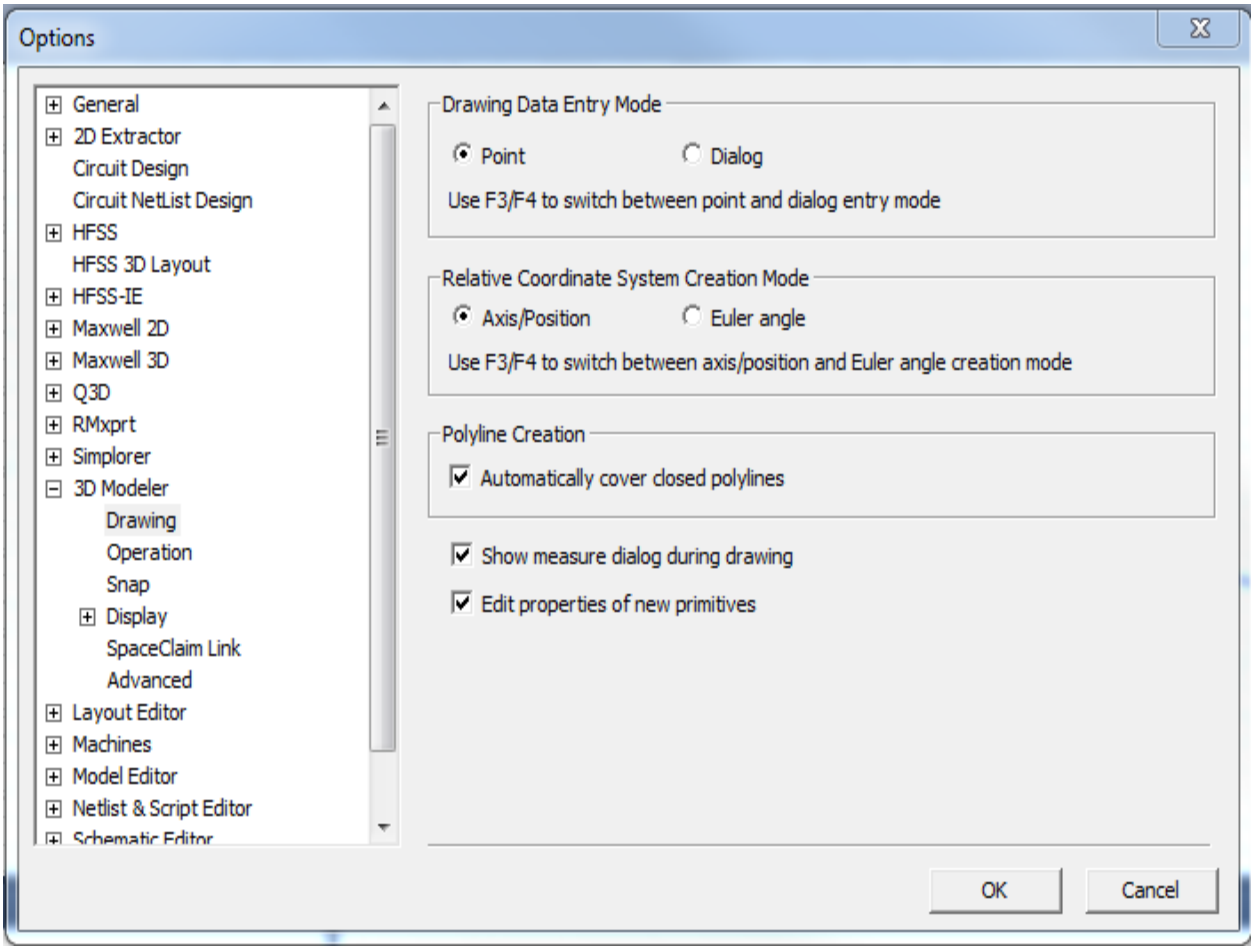

Figure 3-1 Options Dialog

3. On the **Draw** menu, click **Box**.

   The **Measure Data** window occurs and gets populated as you move the cursor (accompanied with a small rectangular box) on the 3D Modeler window. See " The first section of the Tee structure" on page 3-6.

ANSYS Electromagnetics Suite 18.1 - © ANSYS, Inc. All rights reserved. - Contains proprietary and confidential information of ANSYS, Inc. and its subsidiaries and affiliates.

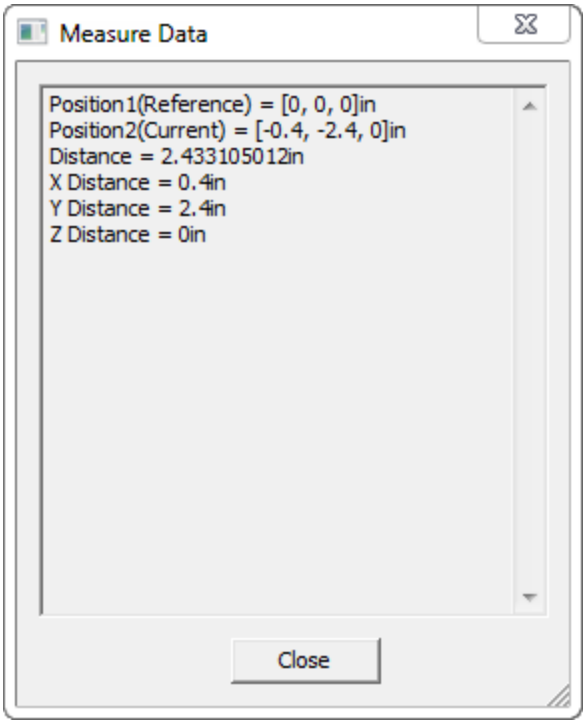

.

Figure 3-2 Measure Data dialog box

4. Click the 3-D Modeler window to establish the origin of the box.
   Two mini xy axes occur as shown below.

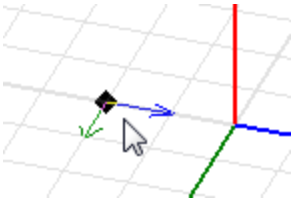

Figure 3-3 mini xy axes

5. Drag the mouse to form a rectangle, click, and then, release.

ANSYS Electromagnetics Suite 18.1 - © ANSYS, Inc. All rights reserved. - Contains proprietary and confidential information of ANSYS, Inc. and its subsidiaries and affiliates.

An arrow pointing upwards along the z-axis occurs.

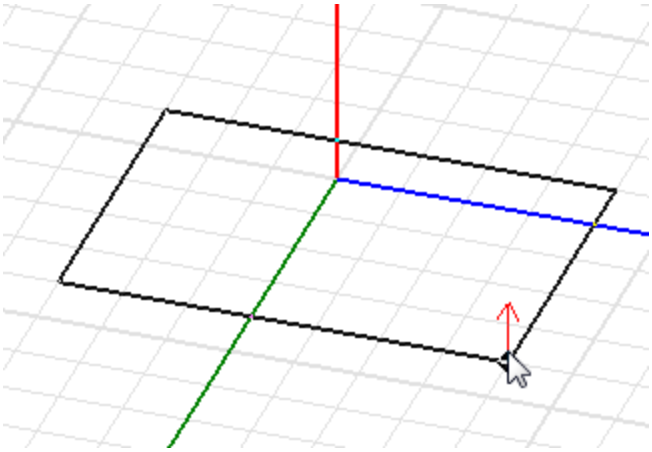

Figure 3-4 The mini Z-axis to set up height

6. Drag the mouse along the z-axis to form the box; click, and then, release.
   The Properties dialog box appears.

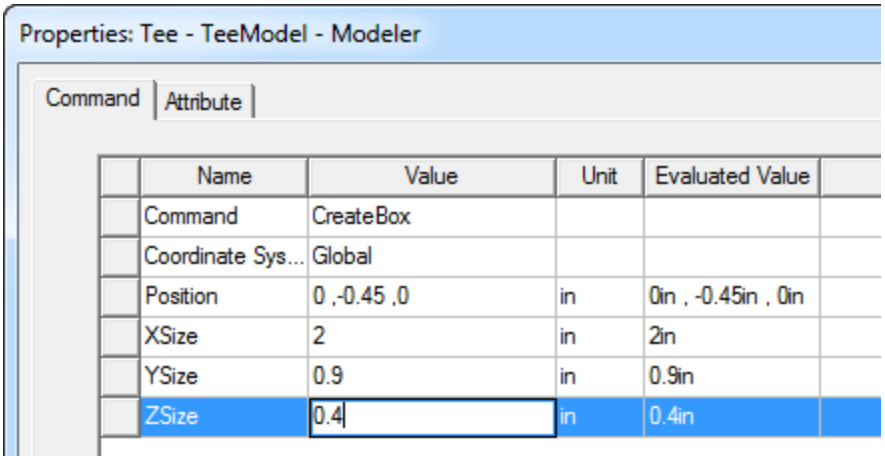

Figure 3-5 Properties (Command tab)

7. Click the corresponding Value cell to make an entry.
8. Enter values of **Position**, **XSize**, **YSize**, and **ZSize** as shown in Figure 3-5 above.
   The co-ordinates and dimensions of the box are set.
9. Click the **Attribute** tab and verify that the **Material** value is "**vacuum**."

   Note The default is vacuum.

ANSYS Electromagnetics Suite 18.1 - © ANSYS, Inc. All rights reserved. - Contains proprietary and confidential information of ANSYS, Inc. and its subsidiaries and affiliates.

10. Type “Tee” for the field “**Name**” and press **Enter**.

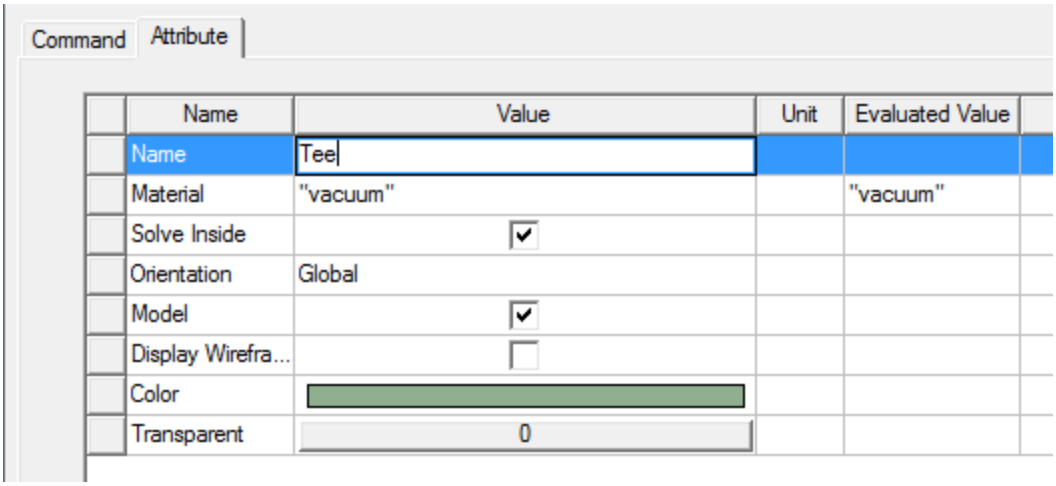

Figure 3-6 Properties (Attributes tab)

11. Click the button near **Transparent**, set it to 0.4 on the **Set Transparency** dialog as shown below, and click **OK**.

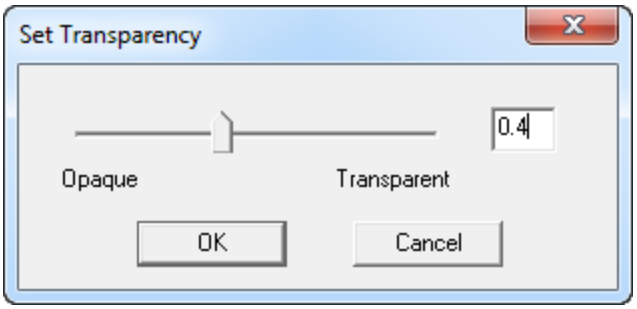

Figure 3-7 Set Transparency dialog box

12. On the **Properties** dialog box, click **OK**.
    The first section of the Tee forms in the **3D Modeler**

ANSYS Electromagnetics Suite 18.1 - © ANSYS, Inc. All rights reserved. - Contains proprietary and confidential information of ANSYS, Inc. and its subsidiaries and affiliates.

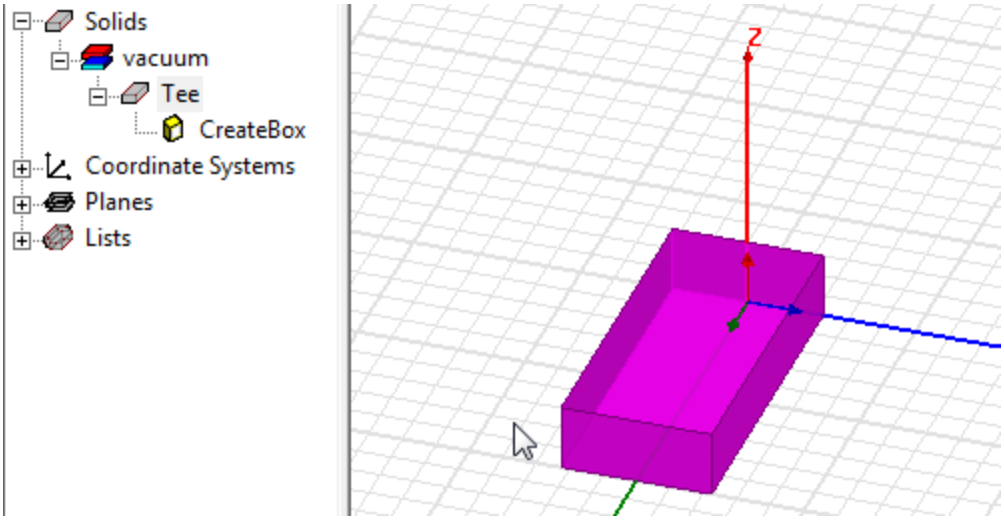

.

Figure 3-8 The first section of the Tee structure

Alternative Method

Another method to draw the box and set its dimensions and co-ordinates is as follows:

1. Verify that the status bar at the bottom of the HFSS window has the following message.

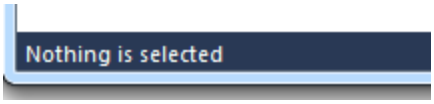

Figure 3-9 Status bar

Note It will change to "**Ready**" or "**Add a box to the model**" when you move the cursor to the box icon.

2. Click the box icon .

   The status changes as follows:

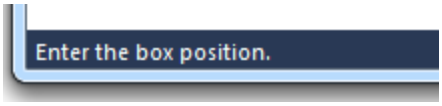

Figure 3-10 Status bar message

ANSYS Electromagnetics Suite 18.1 - © ANSYS, Inc. All rights reserved. - Contains proprietary and confidential information of ANSYS, Inc. and its subsidiaries and affiliates.

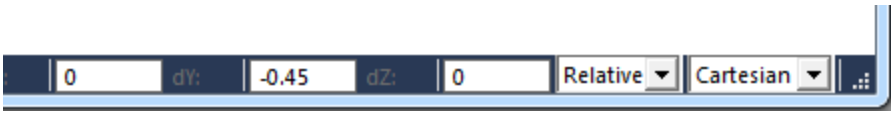

Figure 3-11 X, Y, Z fields.

3. Type (**0, -0.45, 0**) in the co-ordinate fields **X**, **Y**, and **Z** and press **Enter**. The status bar changes as follows.

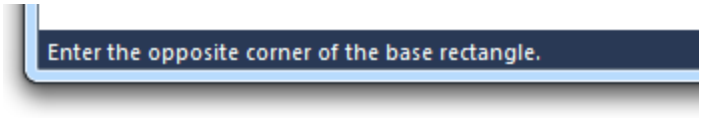

Figure 3-12 Status bar message

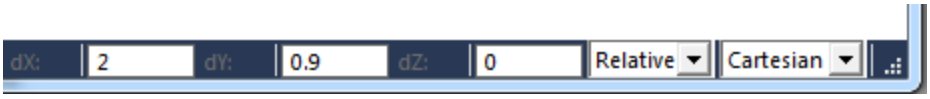

Figure 3-13 dx, dy, dz

4. Type(**2, 0.9, 0**) in the **dx**, **dy**, and **dz** fields as shown in " dx, dy, dz" above. and press Enter. The status changes as follows.

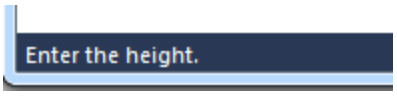

Figure 3-14 Status bar message

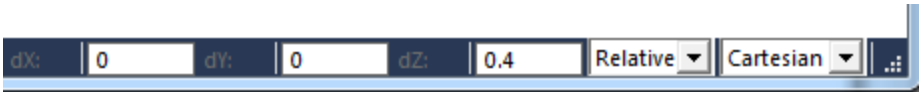

Figure 3-15 Height field dz

5. Type (**0**, **0**, **0.4**) in the **dx**, **dy**, and **dz** fields and press **Enter**.

ANSYS Electromagnetics Suite 18.1 - © ANSYS, Inc. All rights reserved. - Contains proprietary and confidential information of ANSYS, Inc. and its subsidiaries and affiliates.

The **Properties** window appears with the **Command** tab selected. Refer to " Properties (Command tab)" on page 3-4. .

Assign a Wave Port to the Box

You will assign a wave port to the face of the box parallel to the yz plane at x = 2. You will also define an integration line, which is a vector that specifies the direction of the excitation field pattern at the port. These lines ensure that the field pattern is consistent at all ports.

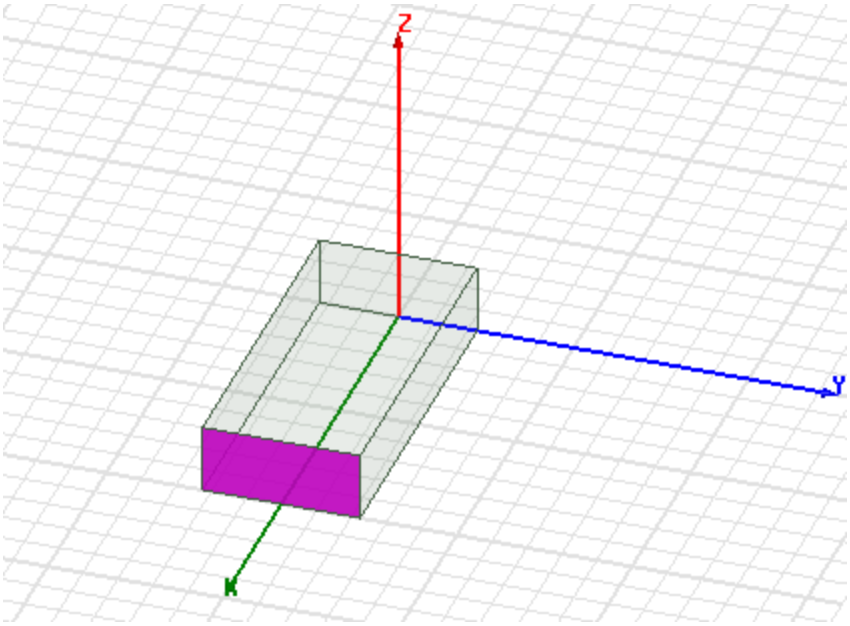

Figure 3-16 Face of the box parallel to the yz plane at x=2

1. Press **F** to enter the face selection mode and click the face parallel to the yz plane.
2. Click the face of box parallel to the yz plane at x=2, as shown in Figure 3-16.

   Note Use the "Measure Data" dialog to locate x=2 as shown in " port line" on page 3-10.
3. Right-click the **3D Modeler** window, go to **Assign Excitation, and click Wave Port** on the shortcut menu.

   The **Wave Port** dialog box appears.
4. Type **Port1** in the **Name** text box, and then click **Next**.
5. Select **New Line** from the **Integration Line** pull-down list as shown below and click **Next**.

ANSYS Electromagnetics Suite 18.1 - © ANSYS, Inc. All rights reserved. - Contains proprietary and confidential information of ANSYS, Inc. and its subsidiaries and affiliates.

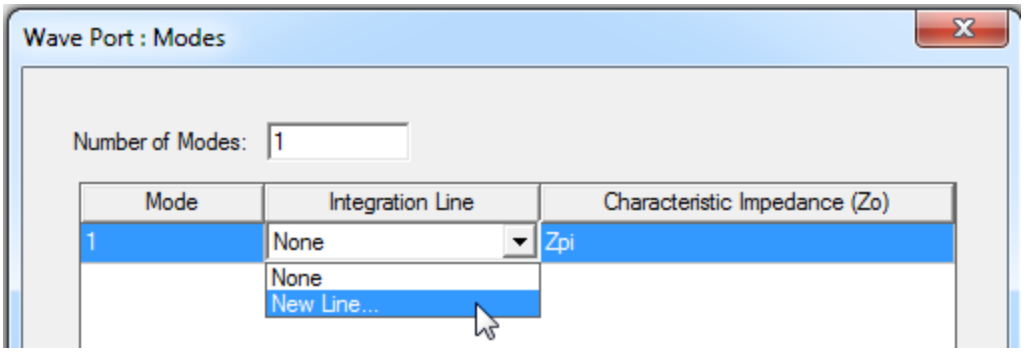

Figure 3-17 Wave Port: Modes

The Measure Data dialog box appears and the cursor is accompanied with a dotted port line.

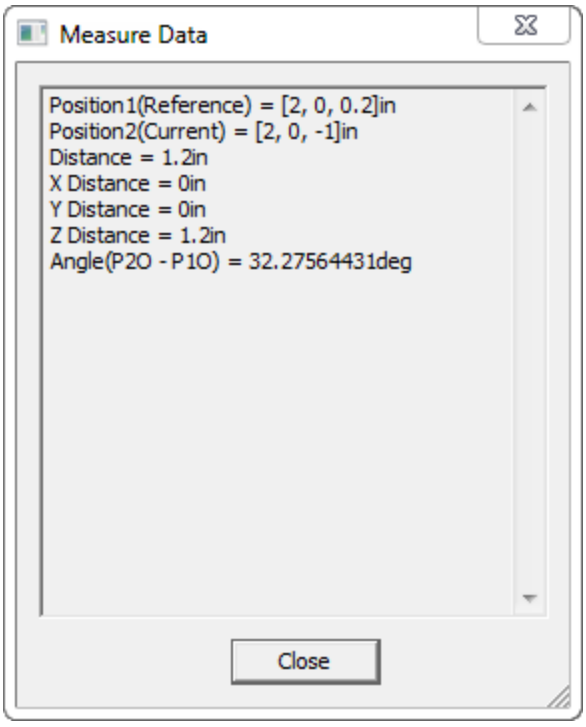

Figure 3-18 Measure Data

ANSYS Electromagnetics Suite 18.1 - © ANSYS, Inc. All rights reserved. - Contains proprietary and confidential information of ANSYS, Inc. and its subsidiaries and affiliates.

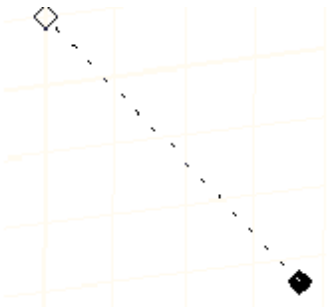

Figure 3-19 port line

6. In the **3D Modeler** window, select the starting point of the vector, (2, 0, 0), by clicking the edge center at the bottom of the face. By default, the cursor should snap to this point, appearing as a triangle.

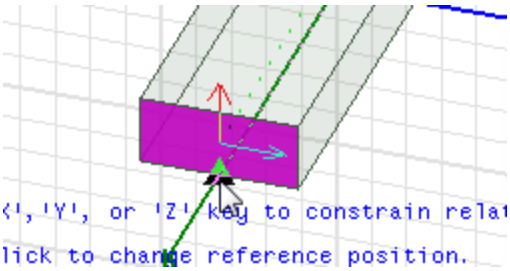

Figure 3-20 vector origin

7. Select the end point (2, 0, 0.4) by clicking the edge center at the top of the face.

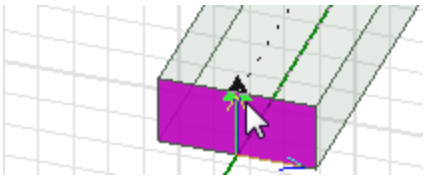

Figure 3-21 vector head

The **Wave Port** dialog box reappears.

ANSYS Electromagnetics Suite 18.1 - © ANSYS, Inc. All rights reserved. - Contains proprietary and confidential information of ANSYS, Inc. and its subsidiaries and affiliates.

8. To accept the remaining default settings, click **Next**.
9. Click **Finish**.

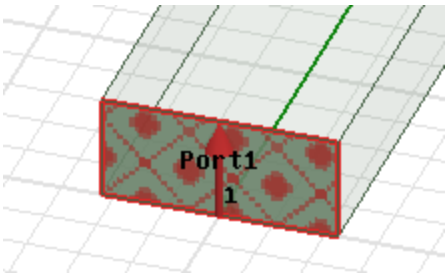

Figure 3-22 The assigned port

Duplicate the Box

You must duplicate the box twice to create the second and third sections of the Tee. You must also duplicate the attributes of the box, its geometry, boundary assignments, and excitations, including wave port settings.

Duplicate Boundaries/mesh operations

1. Go to **Tools>Options>General Options** and click **HFSS**.
2. On the **Boundary Assignment** panel, check **Duplicate boundaries/mesh operations with geometry**, as shown in the figure below.

ANSYS Electromagnetics Suite 18.1 - © ANSYS, Inc. All rights reserved. - Contains proprietary and confidential information of ANSYS, Inc. and its subsidiaries and affiliates.

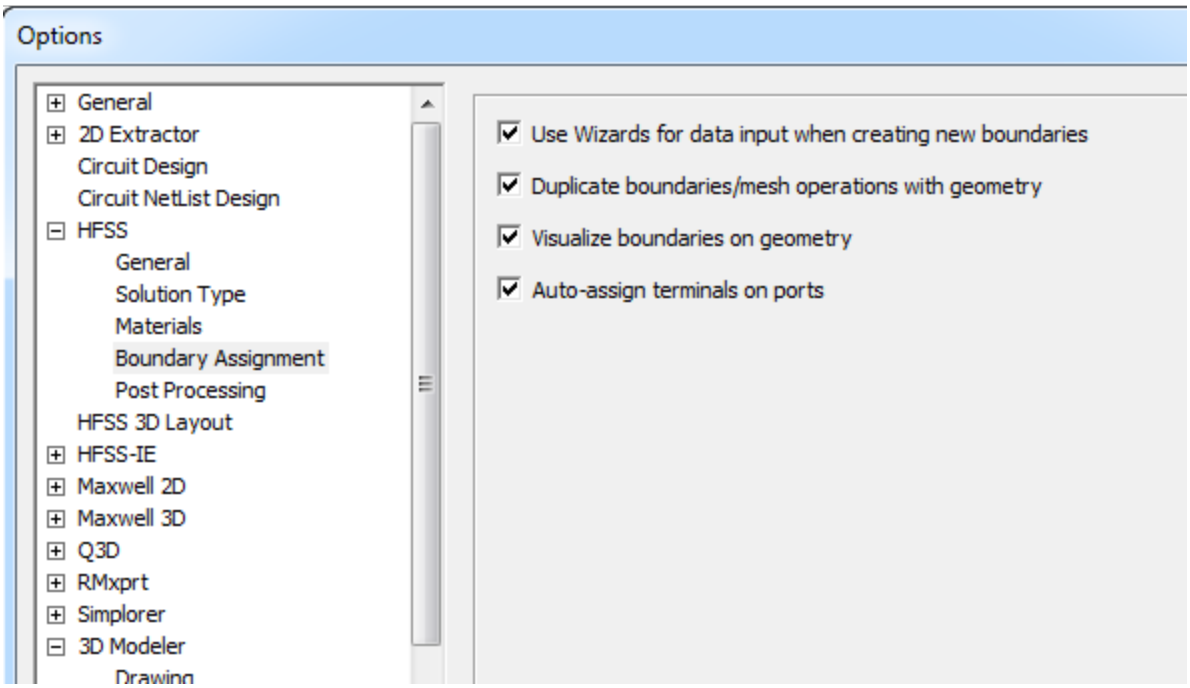

Figure 3-23 HFSS options

3. Click **OK**.

Create the Second Section

You will duplicate the first box to create the second section.

1. Click **Tee** in the history tree to select the object.
2. In the 3D modeler window, right-click to display the shortcut menu and select **Edit>Duplicate> Around Axis** .

   A copy of the existing box along the z-axis and the“**Duplicate Around Axis**” box dialog appears.

ANSYS Electromagnetics Suite 18.1 - © ANSYS, Inc. All rights reserved. - Contains proprietary and confidential information of ANSYS, Inc. and its subsidiaries and affiliates.

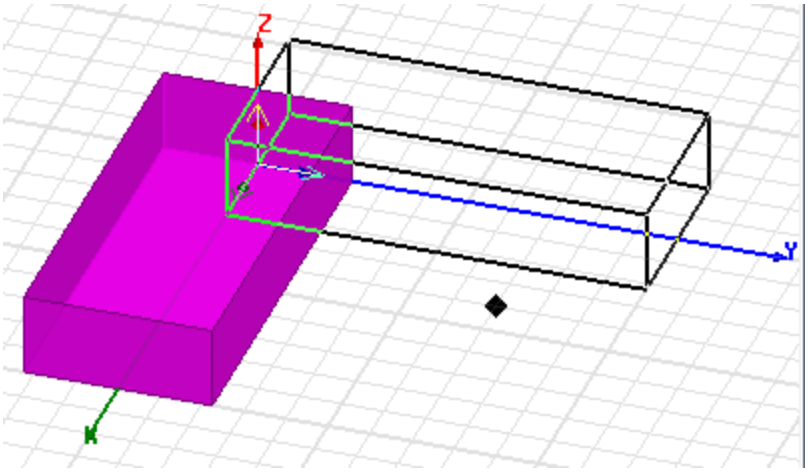

Figure 3-24 Copy of the first box

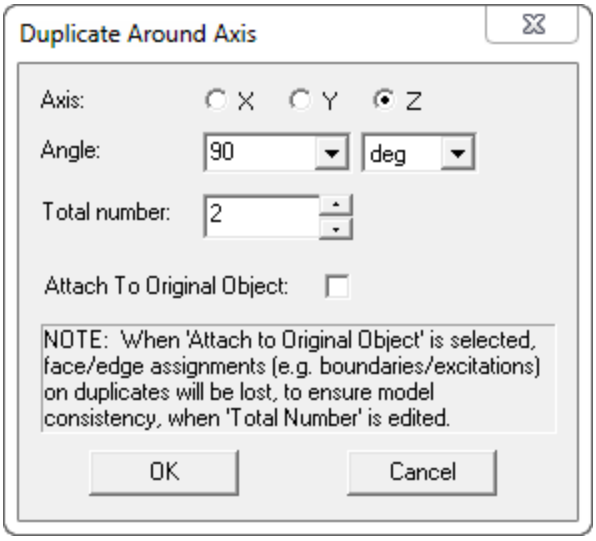

Figure 3-25 Duplicate Around Axis

3. Select the radio button **Z** on thedialog box.
4. Type **90** in the **Angle** box.

   Note A positive angle causes the object to be placed in the counter-clockwise direction.

5. Type **2** in the **Total number** box.

   Note This is the total number of objects, including the original, that will be created.

ANSYS Electromagnetics Suite 18.1 - © ANSYS, Inc. All rights reserved. - Contains proprietary and confidential information of ANSYS, Inc. and its subsidiaries and affiliates.

6. Verify that **Attach to Original Object** is unchecked.
7. Click **OK**.

   The first section is duplicated and the **Properties** dialog box occurs.

   Note The first box is duplicated, and the duplicate, named *Tee_1* by default, is placed around the z-axis at a 90-degree angle. Even the attributes of the parent object, including its dimensions, material, color, transparency, port, and integration line are duplicated.

8. Click **OK** to close the Properties dialog.

   Note Port1 was duplicated with the geometry of the box. The new port is Port2 by default, which you can verify under **Excitations** in the project tree.

9. Press **Ctrl+D** to fit the objects in the view window.

Create the Third Section

Using the same procedure as mentioned in the previous section duplicate the first box, but this time, type **-90** in the **Angle** box.

Note A negative angle causes the object to be placed in the clockwise direction.

1. Press **Ctrl+D** to fit the objects in the view window.

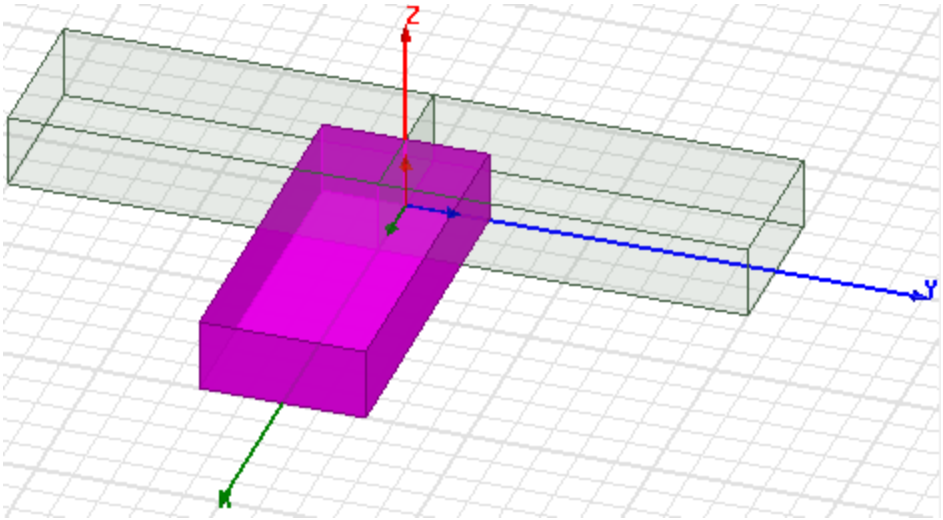

Figure 3-26 The parent object, still selected, and its duplicates

Unite the Three Sections

To create the complete T-junction, you must unite the boxes.

Note HFSS should not create copies of the original objects before uniting, so you must clear the "clone before unite" option in the **3D Modeler Options** dialog box.

ANSYS Electromagnetics Suite 18.1 - © ANSYS, Inc. All rights reserved. - Contains proprietary and confidential information of ANSYS, Inc. and its subsidiaries and affiliates.

1. Click **Tools>Options>Modeler Options**.

   The **3D Modeler Options** dialog appears.
2. On the **Operation** tab, verify that the option **Clone tool objects before uniting** option is unchecked.

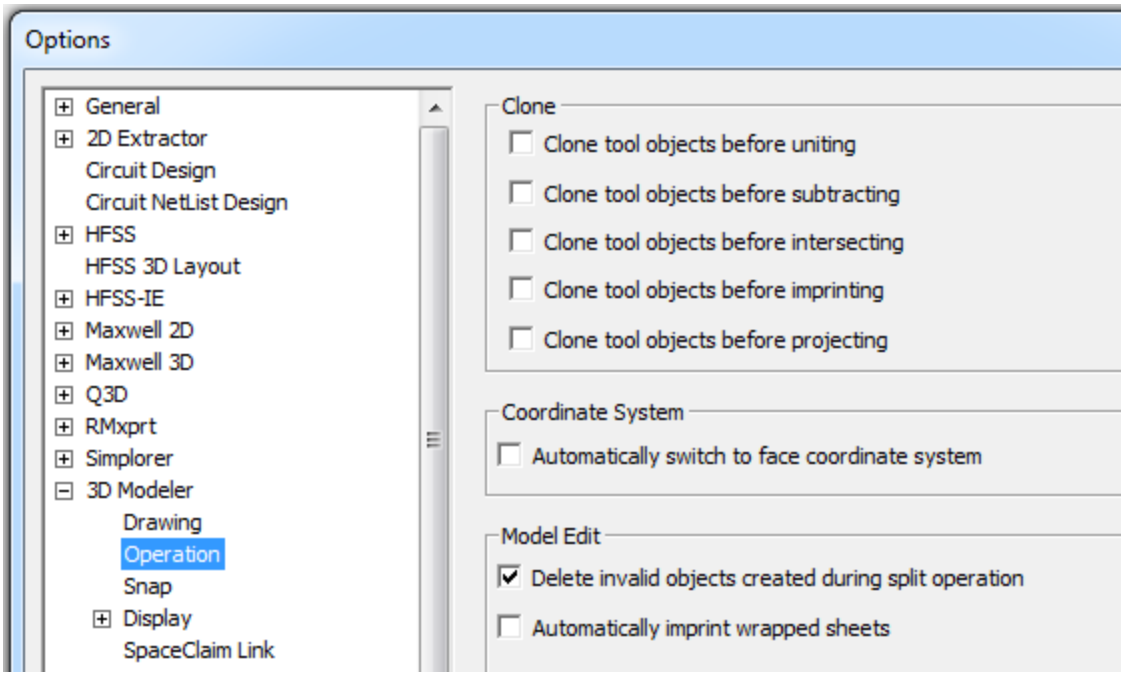

Figure 3-27 3D Modeler options

3. Click **OK**.
4. Press the shortcut key "**O**."

   In this mode, HFSS lets you select objects.
5. Click the first box to select it.
6. Hold the **Ctrl** key and click the second and third boxes.
7. Right-click the **3D Modeler** menu, go to **Edit**, **Boolean**, and then click **Unite** .

   The objects are united at the points of intersection. The new object has the same attributes as the first object selected.

ANSYS Electromagnetics Suite 18.1 - © ANSYS, Inc. All rights reserved. - Contains proprietary and confidential information of ANSYS, Inc. and its subsidiaries and affiliates.

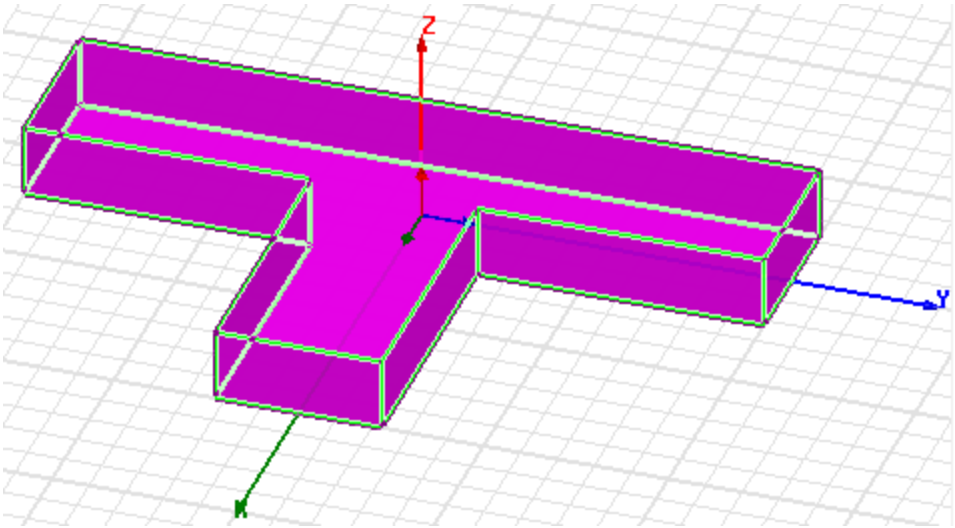

Figure 3-28 The united object

Create the Septum

The septum is a 3D box object that will be subtracted from the T-junction. When you draw the septum, you make its y position dependent on a variable, which will help you move the septum along the y-axis.

Draw a Box

You can draw the box freehand and modify its dimensions and position in the **Properties** window.

1. On the **Draw** menu, click **Box**  .
2. Draw a box inside the Tee's horizontal head as follows:
   - Select a corner of the base rectangle.
   - Select a second corner of the base rectangle.
   - Select a point on the axis perpendicular to the base rectangle.

   When you select the last point of the box, the **Properties** window appears (it opens on the **Command** tab).

ANSYS Electromagnetics Suite 18.1 - © ANSYS, Inc. All rights reserved. - Contains proprietary and confidential information of ANSYS, Inc. and its subsidiaries and affiliates.

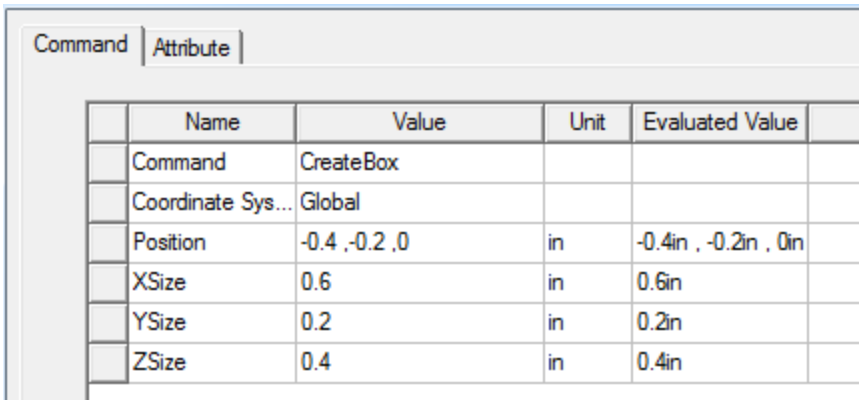

Figure 3-29 Values in the Command tab

Assign Box's Position

3. In the **Properties** window, under the **Command** tab, in the **Position** text box, type **-0.45in, offset - 0.05in, 0in** and press **Enter**.

   The **Add Variable** dialog box appears.

   Note *Offset* is the name of a variable that you will define.

   The **Add Variable** dialog box appears.

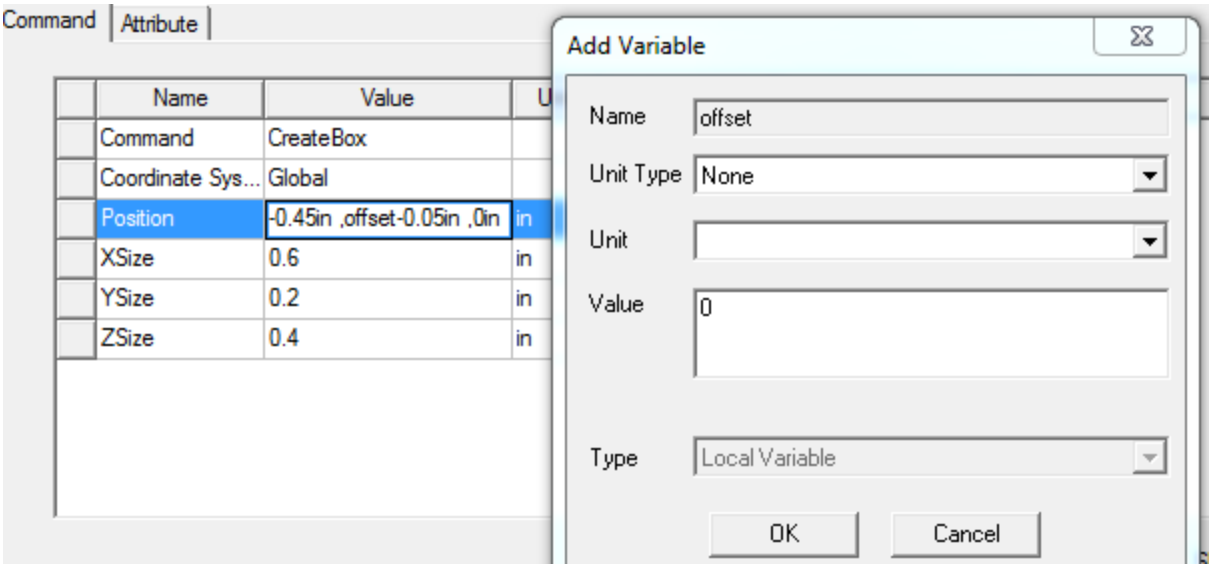

Figure 3-30 Add Variable dialog box

ANSYS Electromagnetics Suite 18.1 - © ANSYS, Inc. All rights reserved. - Contains proprietary and confidential information of ANSYS, Inc. and its subsidiaries and affiliates.

Note The dialog box prompts you to define the value for *offset*. You must include its unit of measurement as part of the value.

4. Type **0in** in the **Value** text box, and then click **OK**.

   The **Properties** window reappears.

Modify the Dimensions of the Septum

1. In the **Properties** window, under the **Command** tab, type **0.45** in the **Xsize** box.
2. Type **0.1** in the **Ysize** box.
3. Type **0.4** in the **Zsize** box.

   While the **Properties** window is open, you will assign a name to the box.

Assign a Name to the Box

1. In the **Properties** window, click the **Attribute** tab.
2. Type **Septum** in the **Value** text box in the **Name** row.
3. Click **OK**.

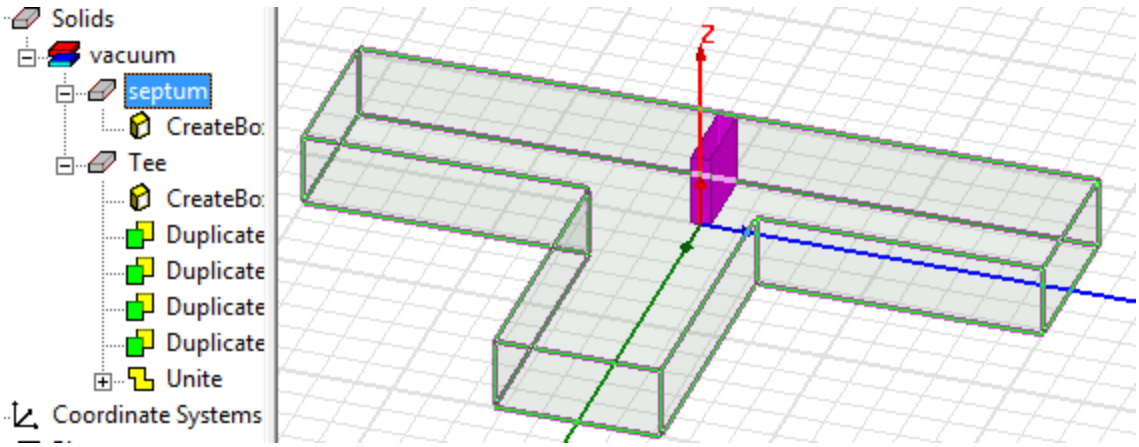

Figure 3-31 The septum object in the 3D Modeler window.

Note To see the septum object clearly press **Alt** and drag the mouse in the direction you want to rotate the view.

Subtract Septum from the T-Junction

To complete the model geometry, you must subtract the septum object from the T-junction.

1. Click **Tee** in the history tree.
2. Press the **Ctrl** key and click **Septum** in the history tree.

ANSYS Electromagnetics Suite 18.1 - © ANSYS, Inc. All rights reserved. - Contains proprietary and confidential information of ANSYS, Inc. and its subsidiaries and affiliates.

3. Click **Modeler**> **Boolean** >**Subtract** (which has the following icon) .



The **Subtract** dialog box appears.

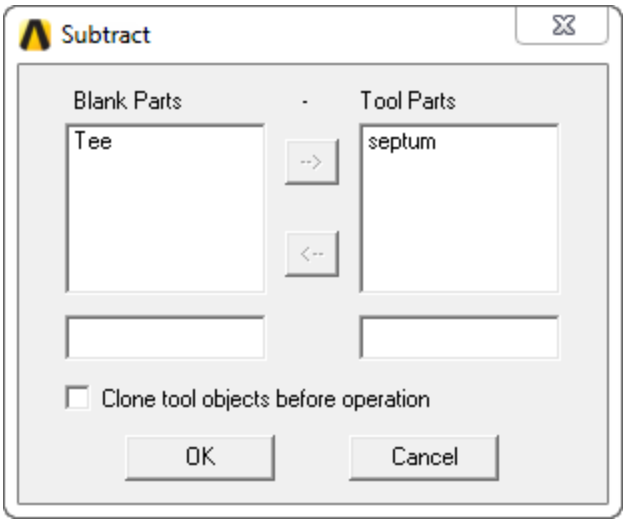

Figure 3-32 Subtract dialog box

Note The placement of septum and Tee in the dialog box indicates that the septum object will be subtracted from the tee object.

4. Go to **Tools**> **Options**> **Modeler Options** and verify the **Clone tool objects before subtracting** option is clear.
5. Click **OK**.

   The septum is subtracted from the Tee. The new object has the same attributes as the first object you selected.

ANSYS Electromagnetics Suite 18.1 - © ANSYS, Inc. All rights reserved. - Contains proprietary and confidential information of ANSYS, Inc. and its subsidiaries and affiliates.

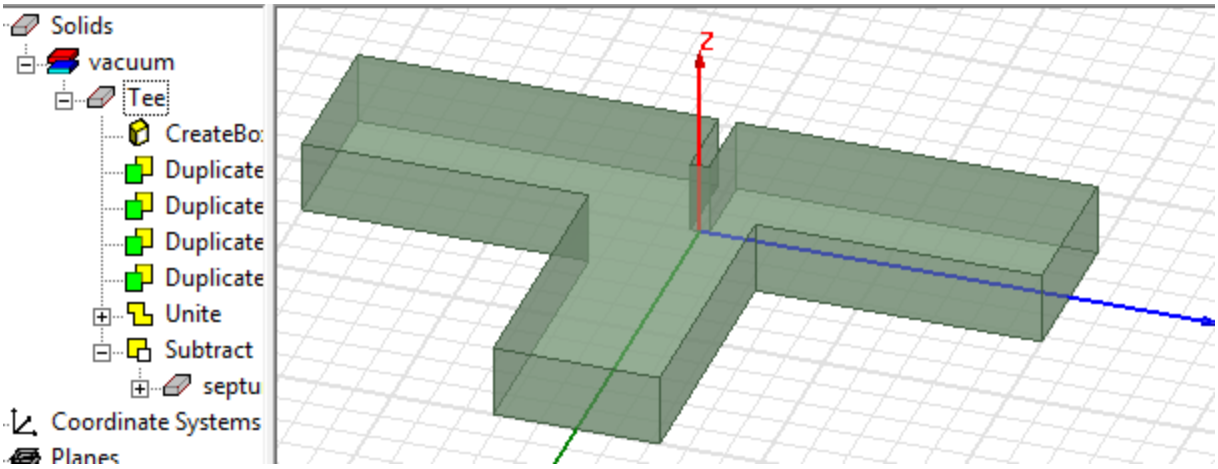

Figure 3-33 The complete model geometry

What's Next?

Now that you know how to design the Tee structure, the next step is to have HFSS solve the same and generate the results. Proceed to the Chapter 4 to run the simulations.

ANSYS Electromagnetics Suite 18.1 - © ANSYS, Inc. All rights reserved. - Contains proprietary and confidential information of ANSYS, Inc. and its subsidiaries and affiliates.

4 - Solve the Design

This chapter covers the following topics:

- Add Solution Setup to the Design.
- Validate the design.
- Analyze the Design.
- Modify Septum's Position.
- Re-Analyze the Tee.
- What's Next?

Add Solution Setup to the Design

In this section, you will specify how HFSS should compute the solution by adding a *solution setup* to the design. You can set up the solution such that HFSS performs an adaptive analysis at 10 GHz.

Note During an adaptive analysis, HFSS refines the mesh iteratively in the areas of highest error.

1. In the project tree, right-click **Analysis**, and select **Add Solution Setup**  on the short-cut menu.
2. The **Solution Setup** dialog box appears.

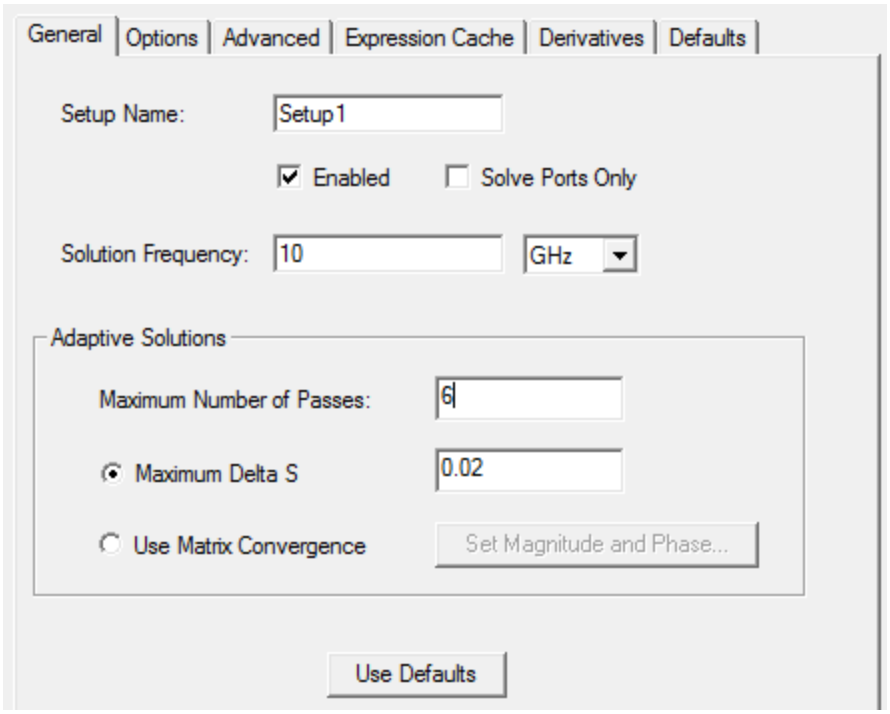

ANSYS Electromagnetics Suite 18.1 - © ANSYS, Inc. All rights reserved. - Contains proprietary and confidential information of ANSYS, Inc. and its subsidiaries and affiliates.

Figure 4-1 Solution Setup

3. On the **General** tab, type **10** in the **Solution Frequency** field, and leave the default unit set to **GHz**.
4. Set **Maximum Number of Passes** to 6.

   Note This is the maximum number of mesh refinement cycles that HFSS will perform.

5. Click **OK**.

   The solution setup is listed in the project tree under **Analysis**. It is named *Setup1* by default.

Add a Frequency Sweep to the Setup

You can add a sweep to the solution set-up for HFSS to solve over a range of frequencies. A smooth frequency response is expected for this design, so you will select an interpolating frequency sweep.

Note An Interpolating sweep estimates a solution for an entire frequency range. HFSS chooses the frequency points at which to solve the field solution so that the entire interpolated solution lies within a specified error tolerance.

The sweep is complete when the solution meets the error tolerance criterion or generates the maximum number of solutions. The sweep is solved after the adaptive analysis is complete.

1. Right-click **Setup1** in the project tree, and then click **Add Frequency Sweep** 

ANSYS Electromagnetics Suite 18.1 - © ANSYS, Inc. All rights reserved. - Contains proprietary and confidential information of ANSYS, Inc. and its subsidiaries and affiliates.

The **Edit Frequency Sweep** dialog box appears.

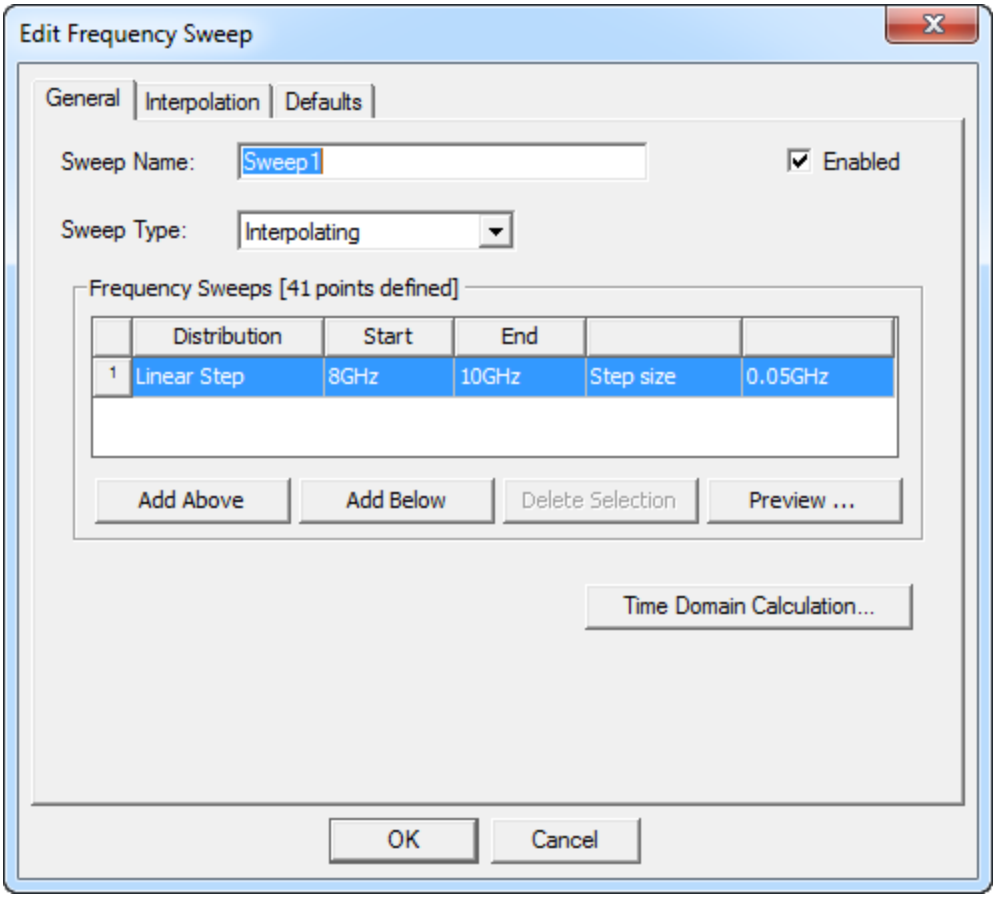

Figure 4-1 Edit Frequency Sweep

2. Enter the following fields on the **General** tab as in " Edit Frequency Sweep" above. :
   - Sweep Name
   - Sweep Type
   - Frequency Setup Type
   - Start Frequency
   - Stop Frequency
   - Step Size

   Note HFSS solves the frequency point at each step in the specified range, including the start and stop frequencies.

3. Click **OK**.

   The frequency sweep gets listed in the project tree under **Setup1** named *Sweep1* by default.

ANSYS Electromagnetics Suite 18.1 - © ANSYS, Inc. All rights reserved. - Contains proprietary and confidential information of ANSYS, Inc. and its subsidiaries and affiliates.

Note Before Solution Setup you must assign wave ports, otherwise the Sweep dialog will not contain a menu item for Interpolating Sweeps.

Validate the Design

Before you run an analysis, verify that all of the necessary setup steps have been completed and their parameters are reasonable.

1. On the **HFSS** menu, click **Validation Check** .

   HFSS checks the project setup, and then the **Validation Check** window appears.

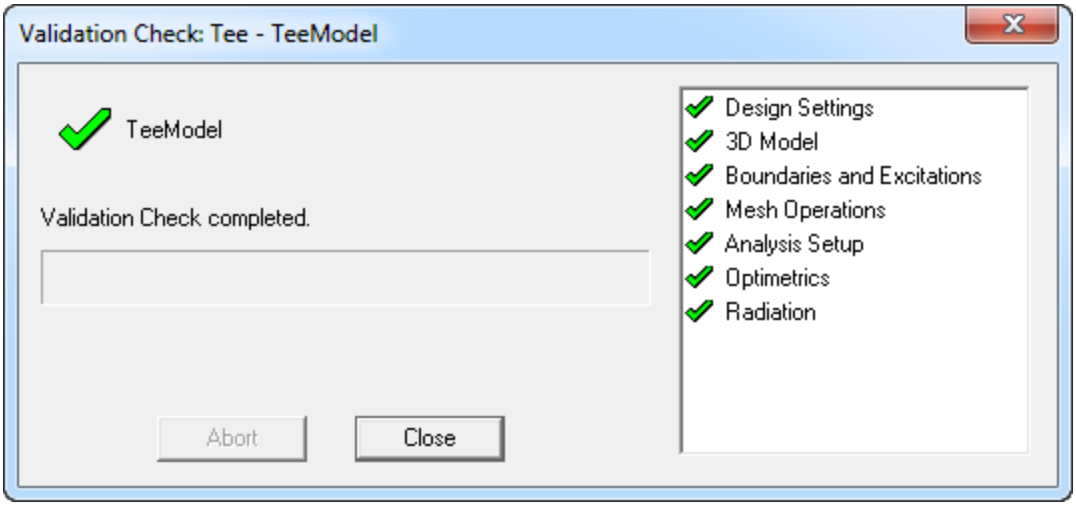

Figure 4-2 Validation Check

2. Click **Close**.

   You are ready to run the simulation.

Analyze the Design

You can move the septum to various positions to analyze the behavior of the Tee-structure as you run the simulations to generate the corresponding results. In this section, you will analyze the design when the septum is placed centrally opposite to Port 1. To analyze the Tee perform the following step:

1. Click **HFSS** >**Analyze All** .

   HFSS computes the 3D field solution for every solution setup in the project. In this problem, Setup1 is the only setup.

ANSYS Electromagnetics Suite 18.1 - © ANSYS, Inc. All rights reserved. - Contains proprietary and confidential information of ANSYS, Inc. and its subsidiaries and affiliates.

Note The solution process takes approximately 1 - 5 minutes. When the solution is complete, a confirmation message appears in the **Message Manager**.

Modify the Septum's Position

You can modify the septum's position by varying the *offset*. You can change the septum position as follows:

1. Right-click **TeeModel** in the project tree, and click **Design Properties from the shortcut menu**.

   The **Properties** dialog box appears as shown in " Properties dialog for offset." below. .

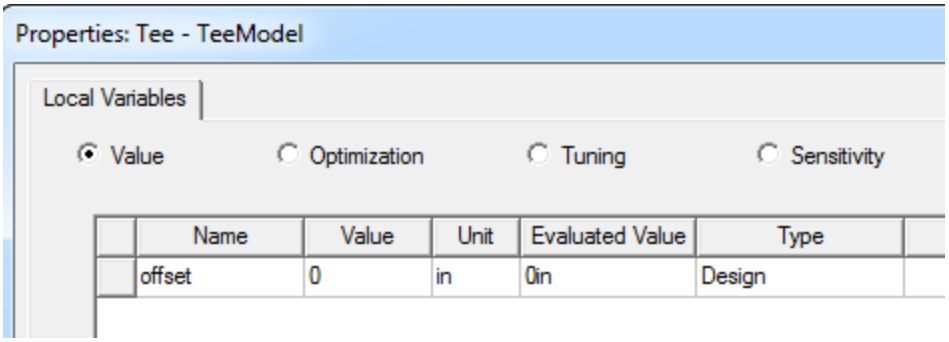

Figure 4-3 Properties dialog for offset.

2. On the **Local Variables** tab, select **Value**.
3. Type **0.2** in the **Value** text box for the variable *offset*.
4. Click **OK**.

   The Tee is updated with the new offset value 0.2.

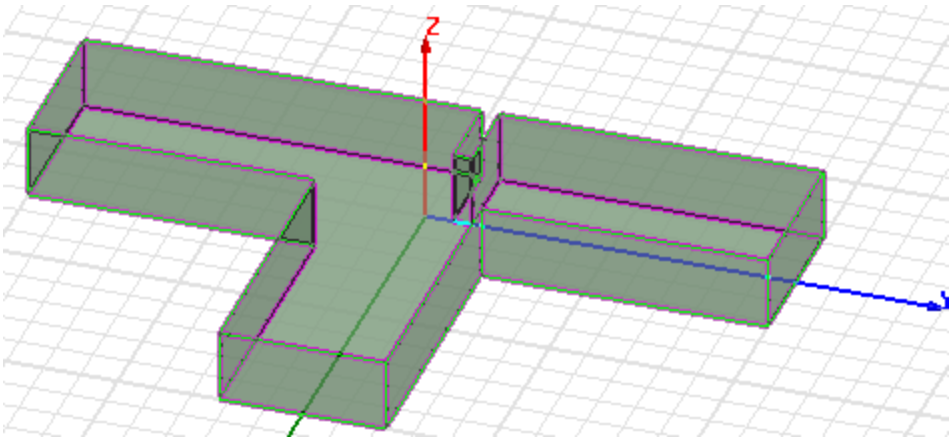

ANSYS Electromagnetics Suite 18.1 - © ANSYS, Inc. All rights reserved. - Contains proprietary and confidential information of ANSYS, Inc. and its subsidiaries and affiliates.

Figure 4-4 > Septum with offset=0.2 in

Re-analyze the Tee

You will run a fresh simulation to generate results for the T-junction when the septum is located closer to Port 2.

Note The previous solution is saved and available for post processing.

1. Right-click **Analysis** in the project tree, and then, click **Analyze All** .

   HFSS computes the new 3D field solution.

The solution process is takes approximately 1 - 5 minutes.

What's Next?

Now that you have run simulations, you can proceed to the next step of creating a 2D x-y plot of S-parameter results, while the analysis is running. HFSS will populate the plot with data when the solution is complete.

ANSYS Electromagnetics Suite 18.1 - © ANSYS, Inc. All rights reserved. - Contains proprietary and confidential information of ANSYS, Inc. and its subsidiaries and affiliates.

5 - Compare the Solutions

This chapter covers the following topics:

- Frequency Versus S-Parameter Plot.
- Curve Information.
- Add Data Markers.
- Create a Field Overlay Plot.
- Modify Septum Position.
- Create the E-Field.
- Animate the E-Field.
- Modify Septum's Position and Re-animate.
- Exit HFSS.

Frequency Versus S-Parameter Plot

You will create a 2D x-y (rectangular) plot to compare the S-parameter results at each port for the two septum positions.

1. Right-click **Results** in the project tree, and click **Create Modal Solution Data Report>Rectangular Plot**.

   The **Report** dialog appears with the **Trace** tab selected.

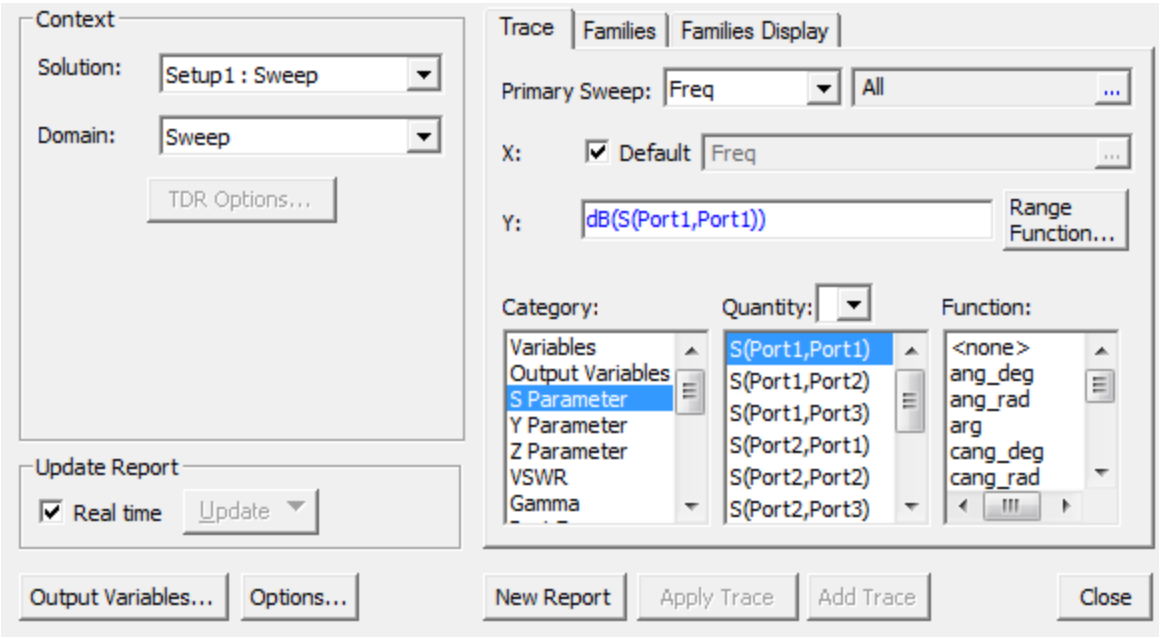

Figure 5-1 XY Plot report dialog

2. For the Trace tab, enter the following fields:

ANSYS Electromagnetics Suite 18.1 - © ANSYS, Inc. All rights reserved. - Contains proprietary and confidential information of ANSYS, Inc. and its subsidiaries and affiliates.

- **Solution:** *Setup1:Sweep1* and **Domain =** *Sweep*.
- **Category** = *S Parameter*
- Press Ctrl to select **Quantity =** *S(Port1,Port1), S(Port1,Port22), S(Port1,Port3)* for the **Y** axis.
- Press Ctrl to select **Function** as *mag.*
- Select *Frequency* as the **X**-axis value.

3. For the Families tab, ensure that the Value field is set to all. You man need to press the ellipsis button [...] and select the radio button for User all values.

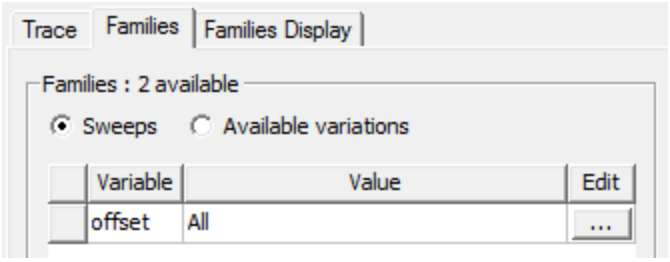

Figure 5-2 Families tab for XY Plot report dialog

4. Click **New Report**.

   A trace represents a line connecting data points on the plot.

5. Click **Close**.

   The magnitude of the S-parameters at each *offset* value will be plotted against frequency on an x-y graph, as shown in " Frequency Vs S-Parameter" on the facing page. .

   The plot is listed under **Results** in the project tree along with its three corresponding trace definitions and two offset values. The Legend shows the Curve info for each trace.

ANSYS Electromagnetics Suite 18.1 - © ANSYS, Inc. All rights reserved. - Contains proprietary and confidential information of ANSYS, Inc. and its subsidiaries and affiliates.

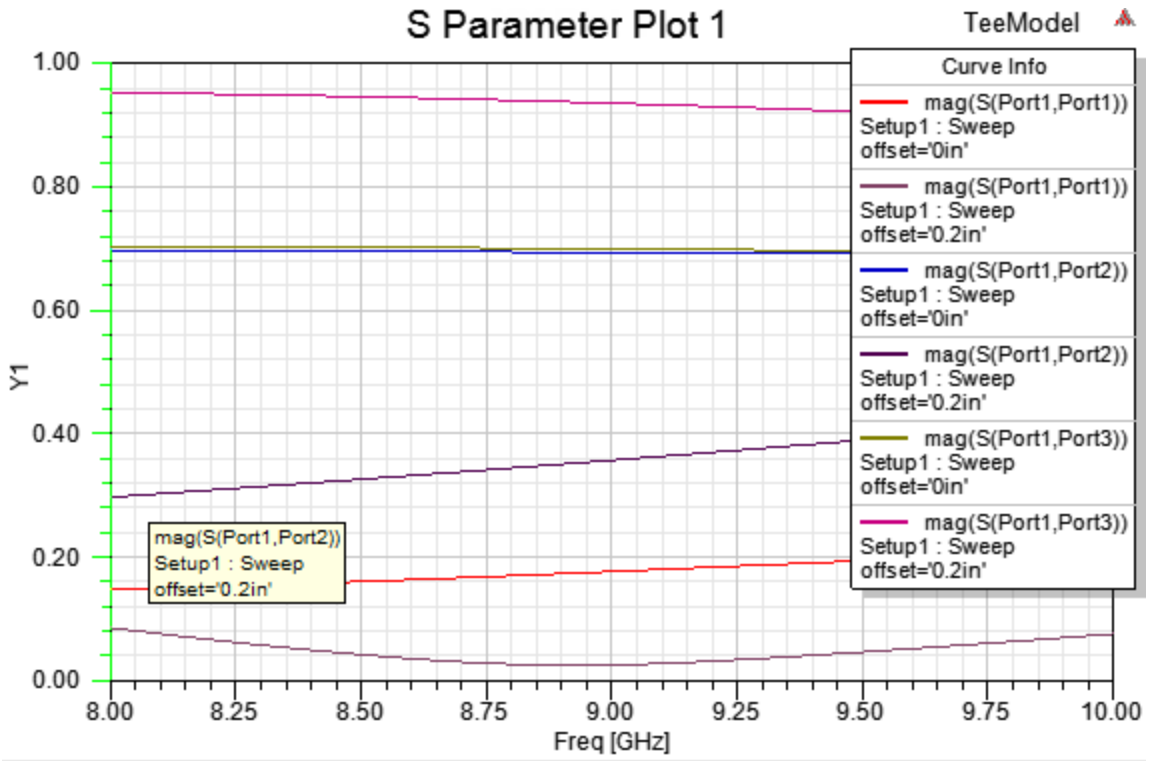

Figure 5-2 Frequency Vs S-Parameter

Note To distinguish between the curves representing S12 and S13, no data points have been assigned for the sake of clarity.

Curve Information

This section describes the results of the plot that we obtained for the Tee-structure. Refer to " Frequency Vs S-Parameter" above. and " Legend" on the next page. to follow the description.

ANSYS Electromagnetics Suite 18.1 - © ANSYS, Inc. All rights reserved. - Contains proprietary and confidential information of ANSYS, Inc. and its subsidiaries and affiliates.

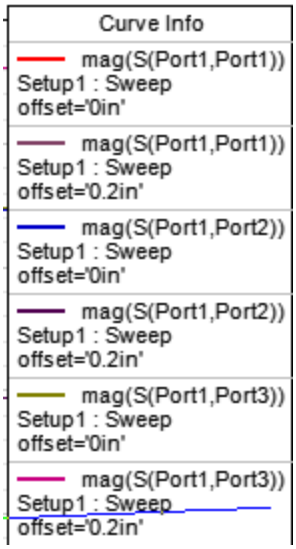

Figure 5-3 Legend

The results are summarized as follows:

- If the septum is exactly opposite to Port 1 i.e. at offset = 0 inch, the signal is transmitted equally to Ports 2 and 3 as indicated by S12 and S13 (blue and magenta curves without the data points) that coincide and are constant at 0.7.
- The value of S11 is under 0.2 i.e. at Port 1.
- If the septum is moved closer to port 2 i.e. offset = 0.2 inch, the curve S11 decreases slightly (green line with circular data points dips down) whereas S12 dips to 0.3 from 0.7 and transmission through Port 3, S13 rises to 0.9.

Our results tally with the observed results that were based on prior simulations and product reviews.

Note See the topic “Analysis of the T” from Chapter 1: Introduction to verify your results with the anticipated results.

Add Data Markers

You can add data points on the curves to better understand the Frequency vs S-parameter plot.

1. Double-click a curve that you intend to assign data points. The Trace Properties dialog box opens as shown below.

ANSYS Electromagnetics Suite 18.1 - © ANSYS, Inc. All rights reserved. - Contains proprietary and confidential information of ANSYS, Inc. and its subsidiaries and affiliates.

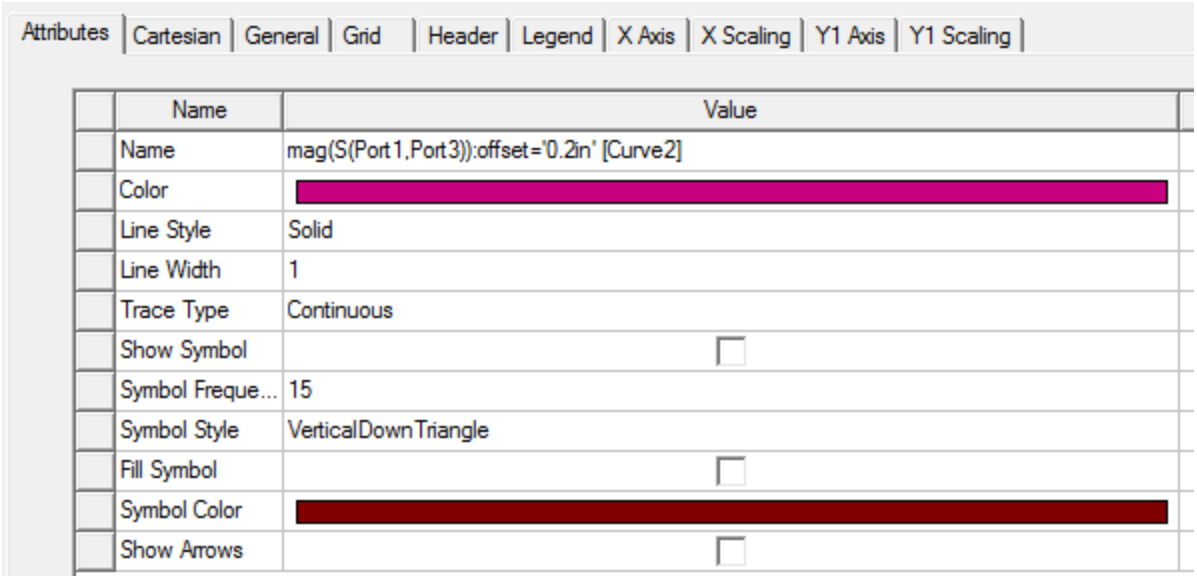

Figure 5-4 Trace Properties dialog

2. Check "**Show Symbol**" and enter 5 as the value for "Symbol Frequency".
3. Click **OK**.

   Data points are appear on the curve.

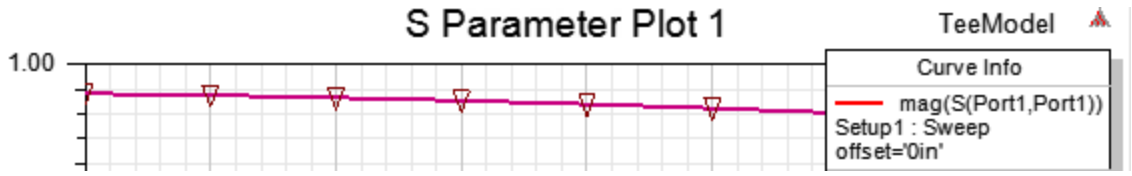

Create a Field Overlay Plot

A field overlay plot represents a field quantity on a surface or within an object. You will plot the magnitude of the E-field on the top surface of the Tee. Before that we will revert to the original position of the septum and create the E field.

Modify Septum Position

1. Right click **HFSSDesign1(DrivenModal)** and select **Design Properties** from the short-cut menu**.**

   The **Local Variables Properties** dialog box opens.
2. Click the radio button **Value** to access the variable *offset*.
3. Enter **0** in the **Value** cell for *offset*, and press **Enter**.

ANSYS Electromagnetics Suite 18.1 - © ANSYS, Inc. All rights reserved. - Contains proprietary and confidential information of ANSYS, Inc. and its subsidiaries and affiliates.

4. Click OK.

   The Tee structure is updated with the new position of the septum in the center.

Create the E Field

1. Hit **F** on the keyboard or right-click in the view window and choose **Select Faces** on the shortcut menu.
2. .Select the top face of the Tee.

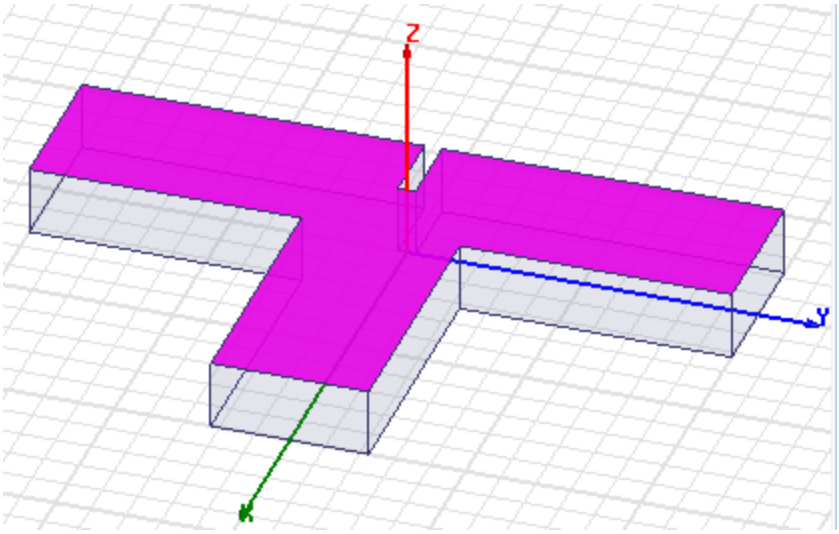

Figure 5-5 upper surface selected

3. Click **HFSS>Fields>Plot Fields>E>Mag_E**.

   The **Create Field Plot** dialog box appears.

ANSYS Electromagnetics Suite 18.1 - © ANSYS, Inc. All rights reserved. - Contains proprietary and confidential information of ANSYS, Inc. and its subsidiaries and affiliates.

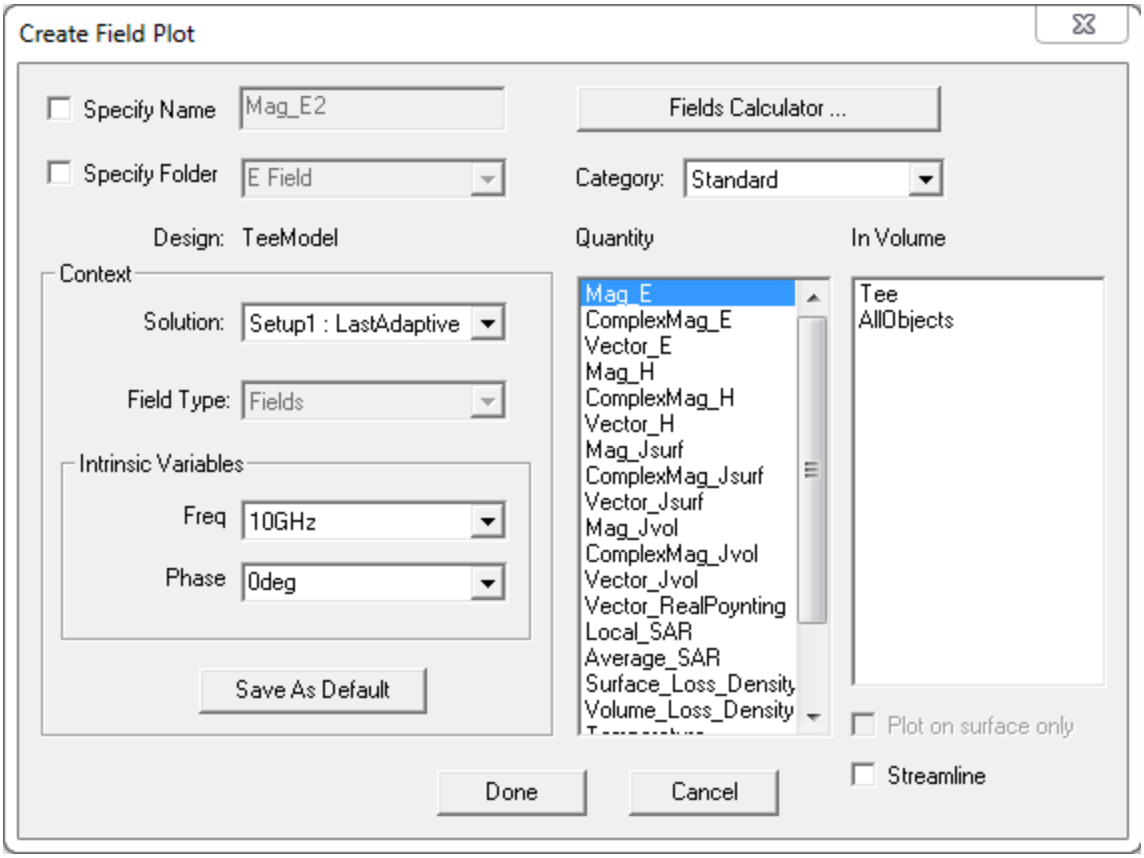

Figure 5-6 Create Field Plot dialog box

4. Verify if the settings are as shown in Figure 5-6.
5. Click Done to accept the default settings.

   The plot appears on the top surface of the T-junction. It shows the E-field distributed evenly towards Port 2 and Port 3.

   The new plot is listed under **Field Overlays** in the project tree. It is named *Mag_E1*, which was the default name set in the **Create Field Plot** dialog box.

ANSYS Electromagnetics Suite 18.1 - © ANSYS, Inc. All rights reserved. - Contains proprietary and confidential information of ANSYS, Inc. and its subsidiaries and affiliates.

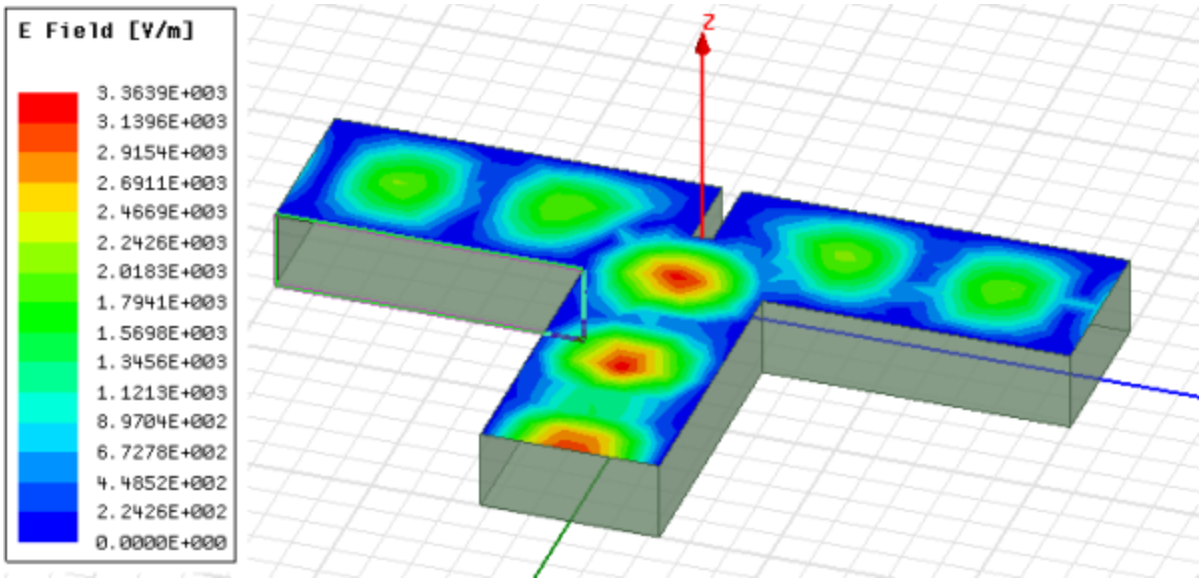

Figure 5-7 The *Mag_E1* plot of the E-field when the septum is located opposite Port 1

Note The new plot is listed in a default folder under **Field Overlays** in the project tree.

You can modify the plot display by selecting E Field in the Project tree and right-click to select Modify Attributes. See the online help for a discussion.

Now you will animate the field overlay plot.

Animate the E-Field

An animated plot is a series of frames that displays a field, mesh, or geometry at varying values. You must specify the values of the plot that you want to include. Each value is a frame in the animation.

1. Right-click **Mag_E1** in the project tree, and then click **Animate**.

   The **Set-up Animation** dialog box appears.

ANSYS Electromagnetics Suite 18.1 - © ANSYS, Inc. All rights reserved. - Contains proprietary and confidential information of ANSYS, Inc. and its subsidiaries and affiliates.

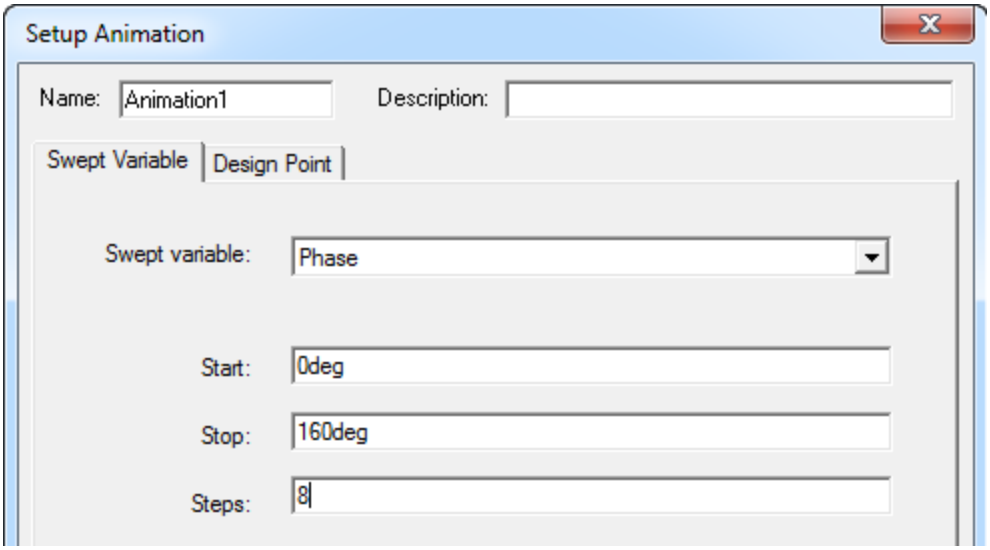

Figure 5-8 Set-up Animation

2. Set the values of the fields as shown in " Set-up Animation" above. .
3. Click **OK**.

   The animation begins in the view window. It shows the septum steering the electromagnetic wave evenly toward Port 2 and Port 3.

   The **Animation** dialog box appears in the upper-left corner of the desktop, enabling you to stop, restart, and control the speed and sequence of the frames.

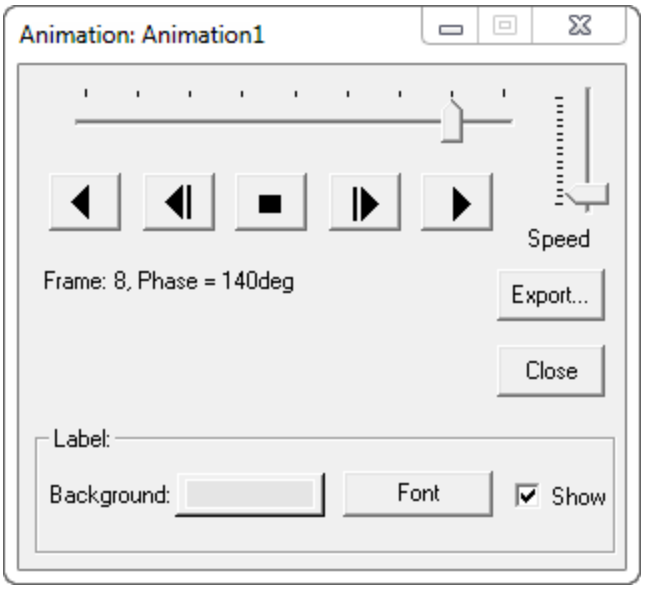

Figure 5-9 Animation Dialog Box

ANSYS Electromagnetics Suite 18.1 - © ANSYS, Inc. All rights reserved. - Contains proprietary and confidential information of ANSYS, Inc. and its subsidiaries and affiliates.

The animation displays the plot at 8 phase values between 0 and 160. The start value is the first frame displayed, resulting in a total of 9 frames in the animation.

4. In the **Animation** dialog box, click the stop button .

Modify Septum's Position and Re-animate

You will move the septum's position closer to Port 2 to see its effect on the E-field pattern on the Tee's top surface.

1. Right click **HFSSDesign1(DrivenModal)** and select **Design Properties** from the short-cut menu**.**

   The **Local Variables Properties** dialog box opens.
2. Click the radio button **Value** to access the variable *offset*.
3. Change the value of offset to 0.2in.

   The Tee structure is updated with the new septum position.
4. Click the Play button to start the updated animation.

   The electromagnetic wave is oriented more towards towards Port 3 than toward Port 2. See the following figure.

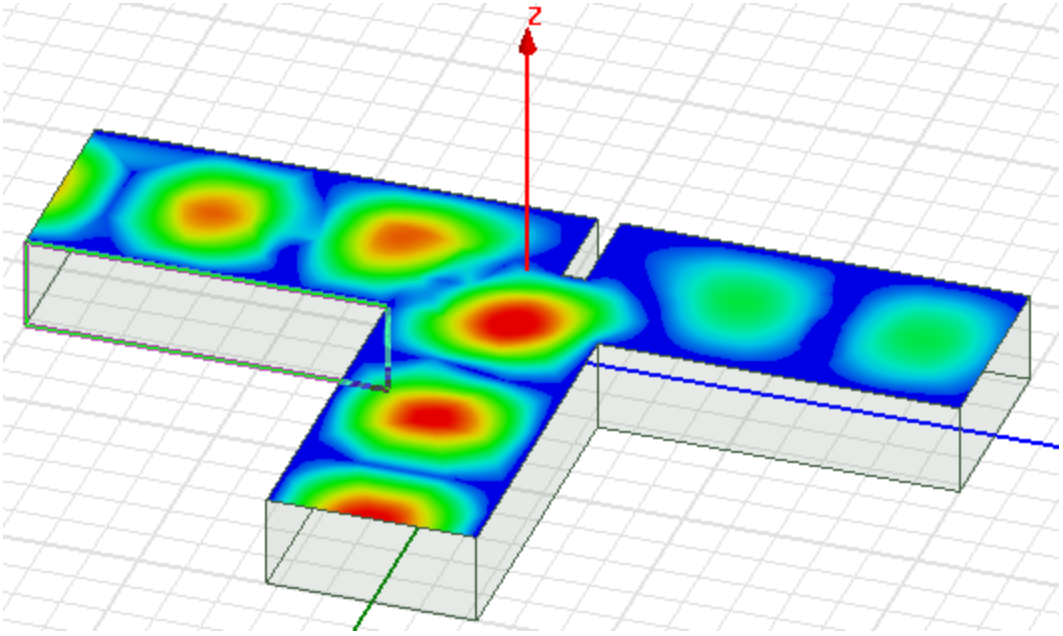

Figure 5-10 The animated *Mag_E1* plot when the offset = 0.2 inches closer to Port 2

ANSYS Electromagnetics Suite 18.1 - © ANSYS, Inc. All rights reserved. - Contains proprietary and confidential information of ANSYS, Inc. and its subsidiaries and affiliates.

Exit HFSS

You have successfully completed the creation of the Tee structure and evaluated its behavior in the electromagnetic field. You may stop the animation, close the *Tee* project, and exit the software.

1. In the **Animation** dialog box, click the stop button , and then click **Close**.
2. Save the project .
3. Click **File>Close**.
4. Click **File>Exit**.

ANSYS Electromagnetics Suite 18.1 - © ANSYS, Inc. All rights reserved. - Contains proprietary and confidential information of ANSYS, Inc. and its subsidiaries and affiliates.